A1

EXISTING SUB DISTRIBUTION BOARD (SDB-EX)

EXISTING ELECTRIC WATER HEATER (WH-EX)

ENGINEERING ROOM OVERVIEW

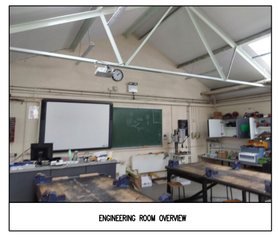

ENGINEERING ROOM OVERVIEW

EXISTING SUB POWER DISTRIBUTION BOARD – TO BE DISCONNECTED & REMOVED.
THE ELECTRICAL CONTRACTOR SHALL TRACE ALL EXISTING CABLING WHICH EXTENDS FROM THIS EXISTING POWER DISTRIBUTION BOARD – ALLOW FOR DISCONNECTING & REMOVING (VERIFY USAGE AND MAKE SAFE PRIOR TO COMMENCING DE-INSTALLATION WORKS).
THE EXISTING SUBMAINS FEED TO THIS POWER DISTRIBUTION BOARD SHALL BE DISCONNECTED & REMOVED BACK TO SOURCE.
EXISTING SUB-CIRCUITS WHICH EXTEND FROM THIS EXISTING DISTRIBUTION BOARD TO SERVE ELECTRICAL OUTLETS, POWER POINTS, LIGHTING ETC. IN AREAS OUTSIDE THE MAIN AREAS OF WORKS SHALL BE DISCONNECTED & DIVERTED TO THE ADJACENT MOST NEW POWER DISTRIBUTION BOARD.
SUB-CIRCUITS WHICH HAVE INSUFFICIENT SLACK TO DIVERT TO THE NEW SDB SHALL BE MODIFIED & EXTENDED AS REQUIRED. ALL SUB-CIRCUIT CABLING SHALL BE CARRIED IN SUITABLY SIZED GALVANISED STEEL CABLE TRUNKING & CONDUITS. ALL NEW CABLING JOINTS SHALL BE MADE IN SUITABLE JUNCTION BOXES C/W CLIP ON CONNECTORS. ALL EXISTING SUB-CIRCUITS WHICH ARE TO BE DIVERTED TO THE NEW POWER DB SHALL BE PROTECTED BY SUITABLY RATED RCBO'S.
EXISTING SUB-CIRCUITS WHICH ARE TO BE DIVERTED SHALL BE TERMINATED IN EITHER THE ESSENTIAL SERVICES SECTION OR NON-ESSENTIAL SERVICES SECTION OF THE NEW POWER DISTRIBUTION BOARD – TO BE DETERMINED ON SITE PRIOR TO COMMENCING WORKS.

EXISTING SUB POWER DISTRIBUTION BOARD – TO BE DISCONNECTED & REMOVED.
THE ELECTRICAL CONTRACTOR SHALL TRACE ALL EXISTING CABLING WHICH EXTENDS FROM THIS EXISTING POWER DISTRIBUTION BOARD – ALLOW FOR DISCONNECTING & REMOVING (VERIFY USAGE AND MAKE SAFE PRIOR TO COMMENCING DE-INSTALLATION WORKS).
THE EXISTING SUBMAINS FEED TO THIS POWER DISTRIBUTION BOARD SHALL BE DISCONNECTED & REMOVED BACK TO SOURCE.
EXISTING SUB-CIRCUITS WHICH EXTEND FROM THIS EXISTING DISTRIBUTION BOARD TO SERVE ELECTRICAL OUTLETS, POWER POINTS, LIGHTING ETC. IN AREAS OUTSIDE THE MAIN AREAS OF WORKS SHALL BE DISCONNECTED & DIVERTED TO THE ADJACENT MOST NEW POWER DISTRIBUTION BOARD.
SUB-CIRCUITS WHICH HAVE INSUFFICIENT SLACK TO DIVERT TO THE NEW SDB SHALL BE MODIFIED & EXTENDED AS REQUIRED. ALL SUB-CIRCUIT CABLING SHALL BE CARRIED IN SUITABLY SIZED GALVANISED STEEL CABLE TRUNKING & CONDUITS. ALL NEW CABLING JOINTS SHALL BE MADE IN SUITABLE JUNCTION BOXES C/W CLIP ON CONNECTORS. ALL EXISTING SUB-CIRCUITS WHICH ARE TO BE DIVERTED TO THE NEW POWER DB SHALL BE PROTECTED BY SUITABLY RATED RCBO'S.
EXISTING SUB-CIRCUITS WHICH ARE TO BE DIVERTED SHALL BE TERMINATED IN EITHER THE ESSENTIAL SERVICES SECTION OR NON-ESSENTIAL SERVICES SECTION OF THE NEW POWER DISTRIBUTION BOARD – TO BE DETERMINED ON SITE PRIOR TO COMMENCING WORKS.

EXISTING ELECTRIC WATER HEATER AT HL TO BE DISCONNECTED AND REMOVED C/W SWITCH FUSE CONNECTION UNIT

WOOD WORK ROOM OVERVIEW

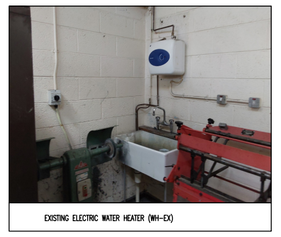

EXISTING ELECTRIC WATER HEATER (WH-EX)

WOOD WORK ROOM OVERVIEW

EXISTING MAIN POWER DISTRIBUTION BOARD .
THE NEW SUB POWER DISTRIBUTION IN THE WOODWORK AND ENGINEERING ROOM .
WOODWORK SUB DISTRIBUTION BOARD SHALL BE SUPPLIED FROM THIS EXISTING DB – MODIFY & EXTEND AS REQUIRED TO ACCEPT A NEW 100A TP&N MCCB FOR SAME.
THE NEW SUB POWER DISTRIBUTION IN THE ENGINEERING ROOM SHALL BE SUPPLIED FROM THIS EXISTING DB – MODIFY & EXTEND AS REQUIRED TO ACCEPT A NEW 100A TP&N MCCB FOR SAME.

EXISTING ICT MAIN DISTRIBUTION FRAME.
ALL NEW ICT DISTRIBUTION FRAMES SHALL BE LINKED TO THIS EXISTING MAIN DISTRIBUTION FRAME WITH NEW FIBRE OPTIC CABLES AS NOTED. THE NEW FIBRE OPTIC CABLES SHALL BE CARRIED IN GALVANISED STEEL CONTAINMENT THROUGHOUT.
THE FIBRE OPTIC CABLES SHALL BE TERMINATED BOTH ENDS IN SWITCHES PROVIDED BY THE SCHOOL AUTHORITY. MODIFY & EXTEND THE EXISTING MDF AS REQUIRED AND TEST & RE-COMMISSION FOLLOWING COMPLETION OF WORKS.
IT SHALL BE THE ELECTRICAL CONTRACTORS RESPONSIBILITY TO SURVEY THE EXISTING BUILDING/S TO DETERMINE THE EXACT LOCATION/S OF THE EXISTING ICT DISTRIBUTION FRAMES.

EXISTING MAIN FIRE ALARM CONTROL PANEL – RETAINED.
ALLOW FOR MODIFYING & EXTENDING THE EXISTING ADDRESSABLE LOOPS AS REQUIRED TO CATER FOR DEINSTALLATION OF EXISTING DEVICES AND INSTALLATION OF NEW DEVICES WITHIN MAIN AREA OF WORKS.
THE FIRE ALARM SYSTEM SHALL BE TESTED & RE-COMMISSIONED FOLLOWING COMPLETION OF WORKS.

THE EXISTING FIRE ALARM & DETECTION SYSTEM MUST REMAIN OPERATIONAL AT ALL TIMES FOR THE DURATION OF THE WORKS. ALL MODIFICATIONS TO THE EXISTING FIRE ALARM SYSTEM SHALL BE CARRIED OUT AT SCHEDULED TIMES TO BE AGREED – ALLOW FOR OUT-OF-HOURS WORKS.
THE ELECTRICAL CONTRACTOR SHALL ALLOW FOR TEMPORARILY DECOMMISSIONING THE FIRE ALARM SYSTEM AS REQUIRED TO FACILITATE WORKS AND FOR RECOMMISSIONING EACH DAY FOLLOWING COMPLETION OF WORKS.

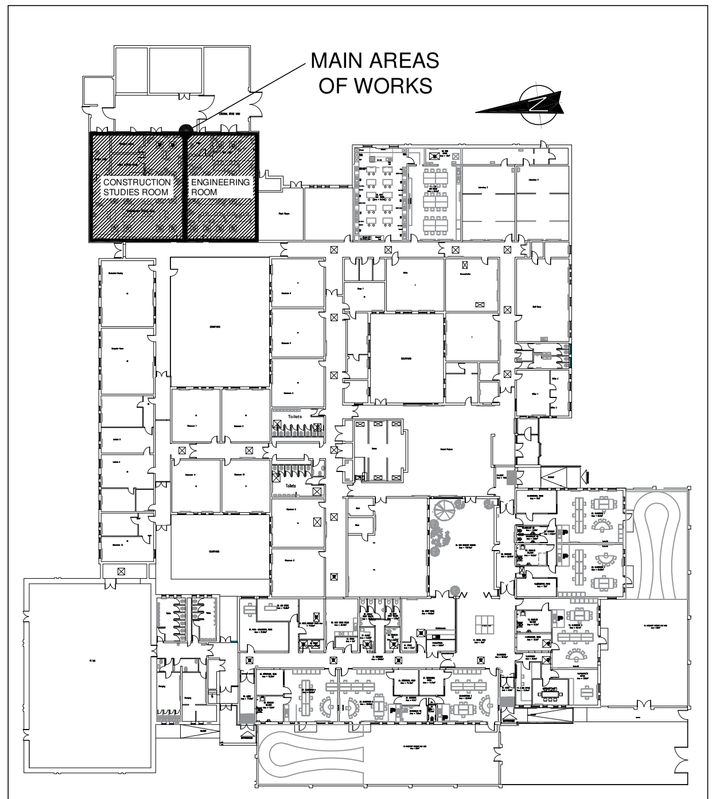

KEYPLAN - GROUND FLOOR (NTS)

GENERAL NOTES

1) Do not scale services equipment from this drawing.
2) All dimensions should be checked on site.
3) Any drawing errors or divergences should be brought to the attention of Geaney Engineering Consultants at the address shown below.
4) Drawing to be read in conjunction with all other drawings and documentation.

DE-INSTALLATION NOTES:

THE ELECTRICAL CONTRACTOR SHALL ALLOW FOR DISCONNECTING & REMOVING OFF SITE ALL EXISTING GENERAL SERVICES & SMALL POWER WITHIN THE MAIN AREAS OF WORKS TOGETHER WITH ALL OBSOLETE CABLING, CONTAINMENT, FIXINGS & SUPPORTS UNLESS INDICATED OTHERWISE.

THE ELECTRICAL CONTRACTOR SHALL ALLOW FOR ALL NECESSARY MODIFICATIONS TO THE EXISTING GENERAL SERVICES & SMALL POWER INFRASTRUCTURE AS REQUIRED TO FACILITATE THE PROPOSED WORKS.

THE FULL EXTENT OF THE EXISTING GENERAL SERVICES & SMALL POWER INSTALLATIONS ARE NOT INDICATED ON THIS DRAWING. ALL EXISTING GENERAL SERVICES & SMALL POWER INDICATED MUST BE VERIFIED BY THE ELECTRICAL CONTRACTOR. IT SHALL BE THE ELECTRICAL CONTRACTORS RESPONSIBILITY TO CARRY OUT A SURVEY TO TRACE AND IDENTIFY ALL EXISTING GENERAL SERVICES & SMALL POWER IMPACTED BY THE PROPOSED WORKS.

THE ELECTRICAL CONTRACTOR MUST TRACE END-TO-END, VERIFY USAGE AND MAKE SAFE ALL EXISTING CABLING IN THE AREAS OF WORKS PRIOR TO COMMENCING DE-INSTALLATION WORKS/MODIFICATIONS.
ISOLATE AND PHYSICALLY DISCONNECT EXISTING LV SUBMAINS AND LV SUB-CIRCUITS AT RESPECTIVE POWER DISTRIBUTION BOARD/S AS REQUIRED PRIOR TO COMMENCING DE-INSTALLATION WORKS/MODIFICATIONS.

EXISTING CABLING RUNNING THROUGH THE MAIN AREAS OF WORKS WHICH SERVES ELECTRICAL INFRASTRUCTURE IN OTHER AREAS WHICH IS TO BE RETAINED SHALL BE IDENTIFIED, LABELLED AND SUITABLY PROTECTED DURING WORKS - ANY EXISTING CABLING WHICH IS NOT MECHANICALLY PROTECTED SHALL BE DIVERTED INTO NEW GALVANISED STEEL CONTAINMENT.

NOTE THAT EXISTING 13A SOCKETS AND POWER POINTS WHICH ARE TO BE DEINSTALLED MAY SHARE SUB-CIRCUITS WITH INFRASTRUCTURE OUTSIDE THE MAIN AREAS OF WORKS - THE ELECTRICAL CONTRACTOR SHALL ALLOW FOR ALL NECESSARY MODIFICATIONS TO THE EXISTING CABLING & CONTAINMENT AS REQUIRED.

ALL MODIFICATIONS TO THE EXISTING ELECTRICAL SERVICES INFRASTRUCTURE SHALL BE REVIEWED WITH THE BUILDING SERVICES ENGINEER PRIOR TO COMMENCING WORKS.

EXISTING ELECTRICAL SERVICES INFRASTRUCTURE IN THE AREAS OF WORKS WHICH IS TO BE RETAINED SHALL BE SUITABLY PROTECTED DURING WORKS.

ALLOW FOR RECOMMISSIONING ALL EXISTING SYSTEMS AFFECTED BY THE WORKS.

THE SCHOOL AUTHORITY SHALL BE MADE AWARE THAT ELECTRICAL SERVICES MAY BE OUT-OF-USE AT TIMES IN AREAS OF THE BUILDING/S OUTSIDE THE MAIN AREAS OF WORKS - THE ELECTRICAL CONTRACTOR SHALL ALLOW FOR OUT-OF-HOURS WORKS TO AVOID IMPACTING SERVICES DURING SCHOOL/OFFICE HOURS.

THE CONTRACTOR IS STRONGLY RECOMMENDED TO VISIT SITE PRIOR TO TENDER TO SURVEY THE AREAS OF WORKS AND FAMILIARISE THEMSELVES WITH THE SCOPE OF WORK INVOLVED WITH THE ABOVE AND ALL OTHER WORKS INDICATED ON THIS DRAWING AND THE ACCOMPANYING DRAWINGS TO ENSURE THAT ALL DUE ALLOWANCES AND NECESSARY COSTS ARE ACCOUNTED FOR IN THEIR TENDER SUBMISSION - ADDITIONAL COSTS INCURRED DUE TO THIS EXERCISE NOT BEING CARRIED OUT WILL NOT BE ACCEPTED.

Revision	Description	Date	Drawn	Checked
A	Tender Issue	29-Jun-2026	KM	JG

GEANEY ENGINEERING CONSULTANTS
STUDIO 22,
WATERFORD BUSINESS PARK,
CORK ROAD,
WATERFORD,
IRELAND.
TEL: 051-879371
FAX: 051-853188
EMAIL: info@geaneyengineering.ie

project title:
Climate Action Summer Works Scheme
Construction Studies & Engineering Room
Refurbishment at
Rath Dara Community College,
Blanchardstown, Dublin 15, Co. Dublin

drawing title:
Existing Electrical General Services Layout

scale: 1:200 @A1

architect: Dermot F Geoghegan Architects LTD

project number: 0839

drawing number: Volume A. 3.3 - EL1

A1

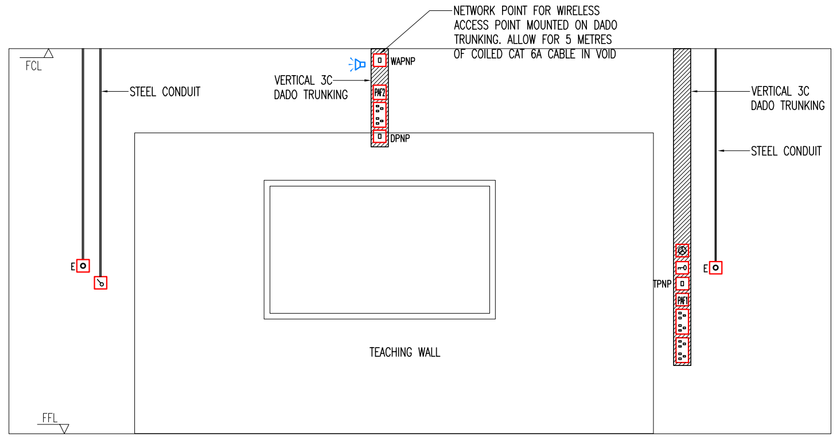

TYPICAL TEACHING WALL ELEVATION – WOODWORK/CONSTRUCTION STUDIES ROOM (NTS)

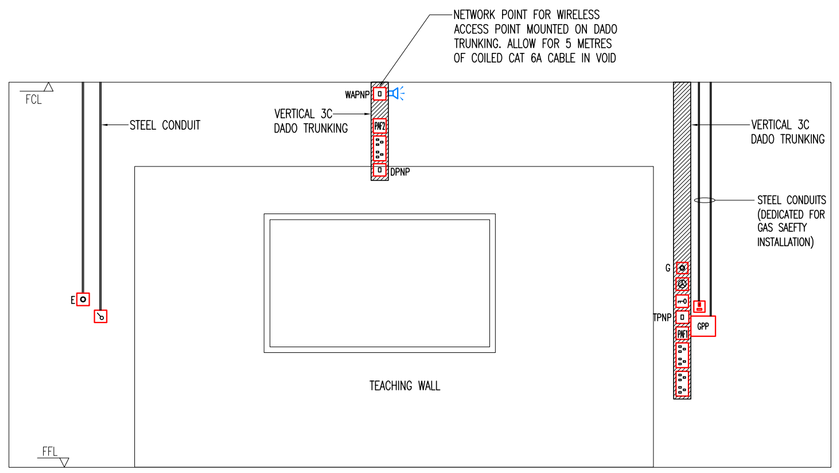

TYPICAL TEACHING WALL ELEVATION – ENGINEERING ROOM (NTS)

TYPICAL TEACHING WALL ELEVATIONS NOTES:

1. FINAL LOCATIONS OF ALL TEACHING WALL OUTLETS AND FIXINGS TO BE AGREED PRIOR TO COMMENCEMENT OF WORKS. A SAMPLE TEACHING WALL SHALL BE MOCKED UP BY THE CONTRACTOR PRIOR TO FULL FIT OUT TO ENSURE FULL AND DETAILED COORDINATION OF THE SERVICES AND THAT THE SCHOOL ARE AWARE OF THE TEACHING WALL SERVICES PROVISIONS.
2. FINAL ARRANGEMENT & TYPES OF OUTLETS IN PROJECTOR AUDIO FACEPLATES AND ALL AV WIRING TO BE AGREED PRIOR TO COMMENCEMENT OF WORKS.

LEGEND:

- THERMOSTAT @ 1300mm AFFL
- KEY OPERATED ELECTRICAL ISOLATOR @ 1200mm AFFL
- LIGHT SWITCH @ 900mm – 1200mm AFFL
- FUSED CONNECTION UNIT
- TWIN SOCKET OUTLET – UNSWITCHED
- WAPNP – RJ45 NETWORK OUTLET – CAT 6A FOR WI-FI ACCESS POINT
- DPNP – RJ45 NETWORK POINT – CAT 6A FOR DATA PROJECTOR (POWER MANAGEMENT)
- TPNP – RJ45 NETWORK POINT – CAT 6A FOR TEACHER POSITION
- PN1 – PROJECTOR AUDIO FACEPLATE – INPUT 2No. HIGH DEFINITION MULTI-MEDIA INTERFACE (HDMI) SOCKET. 1 No. USB OUTLET. 1 No. MINI STEREO JACK PLUG AUDIO INPUT SOCKET.
- PN2 – PROJECTOR AUDIO FACEPLATE – OUTPUT 2 No. HIGH DEFINITION MULTI-MEDIA INTERFACE (HDMI) SOCKET. 1 No. USB OUTLET. L&R AUDIO-OUTPUT PHONO TYPE SOCKETS.
- PUBLIC ADDRESS/CLASS CHANGE SPEAKER UNIT (INTERNAL)
- GPP – GAS PROVING PANEL (KEY OPERATED) @ 1400mm AFFL C/W INTEGRAL EMERGENCY GAS KNOCK OUT POINT
- G – EMERGENCY KNOCKOUT POINT – GAS @ 1200mm AFFL
- E – EMERGENCY KNOCKOUT POINT – ELECTRICAL @ 1200mm AFFL

THE ELECTRICAL CONTRACTOR SHALL COORDINATE DIRECTLY WITH THE MAIN CONTRACTOR TO VERIFY WHETHER EACH INSTALLED MACHINE REQUIRES A SINGLE-PHASE OR THREE-PHASE SUPPLY. FOLLOWING THIS COORDINATION, THE ELECTRICAL CONTRACTOR SHALL PROVIDE AND INSTALL APPROPRIATELY RATED ISOLATORS TO SUIT EACH MACHINE.

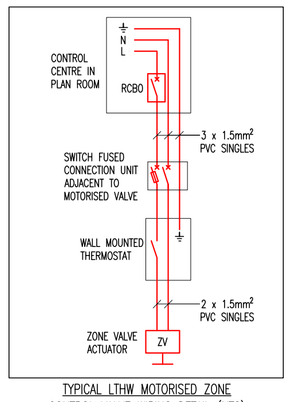

TYPICAL LTHW MOTORISED ZONE CONTROL VALVE WIRING DETAIL (NTS)

GENERAL SERVICES & SMALL POWER NOTES:

1. ELECTRICAL INSTALLATION SHALL BE INSTALLED & CERTIFIED IN ACCORDANCE WITH I.S. 10101: 2020 NATIONAL RULES FOR ELECTRICAL INSTALLATIONS.
2. SURFACE MOUNTED ELECTRICAL OUTLETS, CONNECTION UNITS, SWITCHES AND DEVICES IN MAIN STREAM AREAS SHALL HAVE METALCLAD FINISH WITHOUT KNOCKOUTS AND TGD PART 'M' COMPLIANT FRONT PLATES UNLESS INDICATED OTHERWISE.
3. SURFACE MOUNTED GALVANISED STEEL CONDUIT DROPS ARE NOT ALLOWED IN CORRIDORS AND CIRCULATION AREAS UNLESS AGREED OTHERWISE BY THE DESIGN TEAM. CONDUIT DROPS IN CORRIDORS AND CIRCULATION AREAS SHALL GENERALLY BE IN AN ADJACENT ROOM OR RECESSED IN STUD PARTITIONS/DRY LINING OR CHASED INTO MASONRY WALLS IF NECESSARY – LIAISE WITH MAIN CONTRACTOR.
4. THE ELECTRICAL CONTRACTOR SHALL ALLOW FOR POWER SUPPLY & ELECTRICAL CONNECTION TO ALL MECHANICAL ITEMS.
5. THE ELECTRICAL CONTRACTOR SHALL ALLOW FOR FINAL CONNECTIONS TO ALL LOOSE EQUIPMENT & APPLIANCES.
6. EMERGENCY LIGHTING TEST UNIT TO BE INSTALLED ON ALL ELECTRICAL BOARDS. SEE SPECIFICATION FOR FURTHER DETAILS.
7. SURGE PROTECTION TO BE INSTALLED ON ALL DISTRIBUTION BOARDS. SEE SPECIFICATION FOR FURTHER DETAILS.
8. ALL ELECTRICAL DISTRIBUTION BOARDS SHALL BE LOCKABLE.
9. THE MAXIMUM HEIGHT TO THE TOP OF DISTRIBUTION BOARDS SHALL BE 2150mm AFFL.
10. OUTLETS AND FIXINGS MOUNTED IN DADO TRUNKING SHALL BE OF A RANGE RECOMMENDED FOR THE TRUNKING.
11. ALL NETWORK POINTS SHALL BE WIRED IN CAT 6A CABLING BACK TO THE NEW ICT DISTRIBUTION FRAME UNLESS INDICATED OTHERWISE.
12. ALL GENERAL SERVICES & SMALL POWER CIRCUITS SHALL BE PROTECTED BY AN RCBO.
13. SUB-CIRCUIT CABLING SHALL GENERALLY BE PVC SINGLES CARRIED IN GALVANISED STEEL CONTAINMENT THROUGHOUT. PRIMARY CONTAINMENT SHALL GENERALLY BE SUITABLY SIZED GALVANISED STEEL CABLE TRUNKING. SECONDARY CONTAINMENT SHALL GENERALLY BE GALVANISED STEEL CONDUIT UNLESS INDICATED OTHERWISE.
14. ANNULAR SPACE IN STEEL CONDUITS AT COUPLERS WHERE THEY CONNECT TO OUTLETS, SWITCHES AND DEVICES IN HEATED SPACES MUST BE SEALED WITH A SUITABLE MASTIC TO PREVENT ENTRY OF WARM HUMID AIR AND POTENTIAL FOR CONDENSATION WITHIN THE ELECTRICAL CONTAINMENT SYSTEM.
15. ANY SINGLE PHASE CIRCUIT FED DIRECTLY FROM A THREE PHASE DISTRIBUTION BOARD SHALL HAVE THE APPROPRIATE PHASE COLOUR EXTENDED INTO THE SINGLE PHASE CIRCUITS FED FROM THAT PHASE.
16. THE ELECTRICAL CONTRACTOR SHALL ENSURE THAT THE CIRCUITS ARE DISTRIBUTED EVENLY OVER THE PHASES.
17. THERE SHALL BE A MAXIMUM OF 6No. SINGLE OR TWIN SOCKET OUTLETS PER CIRCUIT WITH EACH CIRCUIT PROTECTED BY AN RCBO. ALL SOCKET OUTLETS IN ANY ONE ROOM SHALL BE CONNECTED TO THE SAME PHASE.
18. THE ELECTRICAL CONTRACTOR SHALL ALLOW FOR EQUIPOTENTIAL BONDING INCLUDING THE 'T' BARS IN THE SUSPENDED CEILINGS – ALL TO COMPLY WITH CURRENT ETCI REGULATIONS.
19. FINAL LOCATIONS OF ALL TEACHING WALL OUTLETS AND FIXINGS TO BE AGREED PRIOR TO COMMENCEMENT OF WORKS. A SAMPLE TEACHING WALL SHALL BE MOCKED UP BY THE CONTRACTOR PRIOR TO FULL FIT OUT TO ENSURE FULL AND DETAILED COORDINATION OF THE SERVICES AND THAT THE SCHOOL ARE AWARE OF THE TEACHING WALL SERVICES PROVISIONS.
20. FINAL ARRANGEMENT & TYPES OF OUTLETS IN PROJECTOR AUDIO FACEPLATES AND ALL AV WIRING TO BE AGREED PRIOR TO COMMENCEMENT OF WORKS.
21. ALL NEW SWITCHES, OUTLETS AND CONTROLS SHALL BE TGD PART 'M' COMPLIANT. FRONT PLATES OF ALL SHALL BE VISUALLY CONTRASTING WITH BACKGROUND.

GENERAL NOTES

1) Do not scale services equipment from this drawing.
2) All dimensions should be checked on site.
3) Any drawing errors or divergences should be brought to the attention of Geaney Engineering Consultants at the address shown below.
4) Drawing to be read in conjunction with all other drawings and documentation.

GENERAL SERVICES & SMALL POWER LEGEND:

- SUB POWER DISTRIBUTION BOARD
- 13A SINGLE SOCKET OUTLET – 'UNSWITCHED' TYPE
- 13A TWIN SOCKET OUTLET – 'UNSWITCHED' TYPE
- CS – CLEANERS 13A DOUBLE POLE SWITCHED TWIN SOCKET OUTLET
- FUSED CONNECTION UNIT C/W NEON INDICATOR – 'UNSWITCHED' TYPE
- DOUBLE POLE SWITCHED FUSED CONNECTION UNIT C/W NEON INDICATOR
- SINGLE PHASE & NEUTRAL ISOLATOR – RATING AS INDICATED
- THREE PHASE & NEUTRAL ISOLATOR – RATING AS INDICATED
- SINGLE PHASE & NEUTRAL + EARTH SOCKET OUTLET (3PIN) – RATING AS INDICATED, MK COMMANDO RANGE OR EQUIVALENT
- SP – ALUMINIUM TENSION MOUNTED SERVICE POLE C/W OUTLETS AS INDICATED (SNEIDER ELECTRIC OR EQUIVALENT)
- EMERGENCY KNOCKOUT POINT – ELECTRICAL SUPPLY
- E – KEY OPERATED ELECTRICAL ISOLATOR
- D – KEY OPERATED ELECTRICAL ISOLATOR FOR CENTRAL DUST EXTRACT SYSTEM
- AD – AUTOMATIC SLIDING DAMPER ON DUST EXTRACT DUCTWORK DRIVEN BY 24V PNEUMATIC CYLINDER/S
- RJ45 NETWORK OUTLET – CAT 6A
- 2 – TWIN RJ45 NETWORK OUTLET – CAT 6A
- 6 – WI-FI ACCESS POINT
- PN1 – PROJECTOR AUDIO FACEPLATE – INPUT 2 No. HIGH DEFINITION MULTI-MEDIA INTERFACE (HDMI) SOCKET. 1 No. USB OUTLET. 1 No. MINI STEREO JACK PLUG AUDIO INPUT SOCKET.
- PN2 – PROJECTOR AUDIO FACEPLATE – OUTPUT 2 No. HIGH DEFINITION MULTI-MEDIA INTERFACE (HDMI) SOCKET. 1 No. USB OUTLET. L&R AUDIO-OUTPUT PHONO TYPE SOCKETS.
- 3 COMPARTMENT DADO TRUNKING
- DT – 3 COMPARTMENT DADO TRUNKING VERTICAL DROP
- PUBLIC ADDRESS/CLASS CHANGE SPEAKER UNIT
- VC – PUBLIC ADDRESS/CLASS CHANGE SPEAKER UNIT WITH LOCAL ON/OFF AND VOLUME CONTROL
- EXTERNAL PUBLIC ADDRESS/CLASS CHANGE 'HORN' TYPE SPEAKER UNIT
- T – ROOM THERMOSTAT WITH A LOCKABLE RANGE UP TO A MAXIMUM OF 22°C (24°C IN SEN AREAS) LINKED TO MOTORISED ZONE CONTROL VALVE/ACTUATOR ON MANIFOLD
- WH – 2.0kW ELECTRIC WATER HEATER
- A – MOTORISED WINDOW BLINDS ACTUATOR
- MC – MOTORISED WINDOW BLINDS CONTROL UNIT
- FAN SPEED CONTROLLER
- TIMECLOCK C/W LED INDICATOR

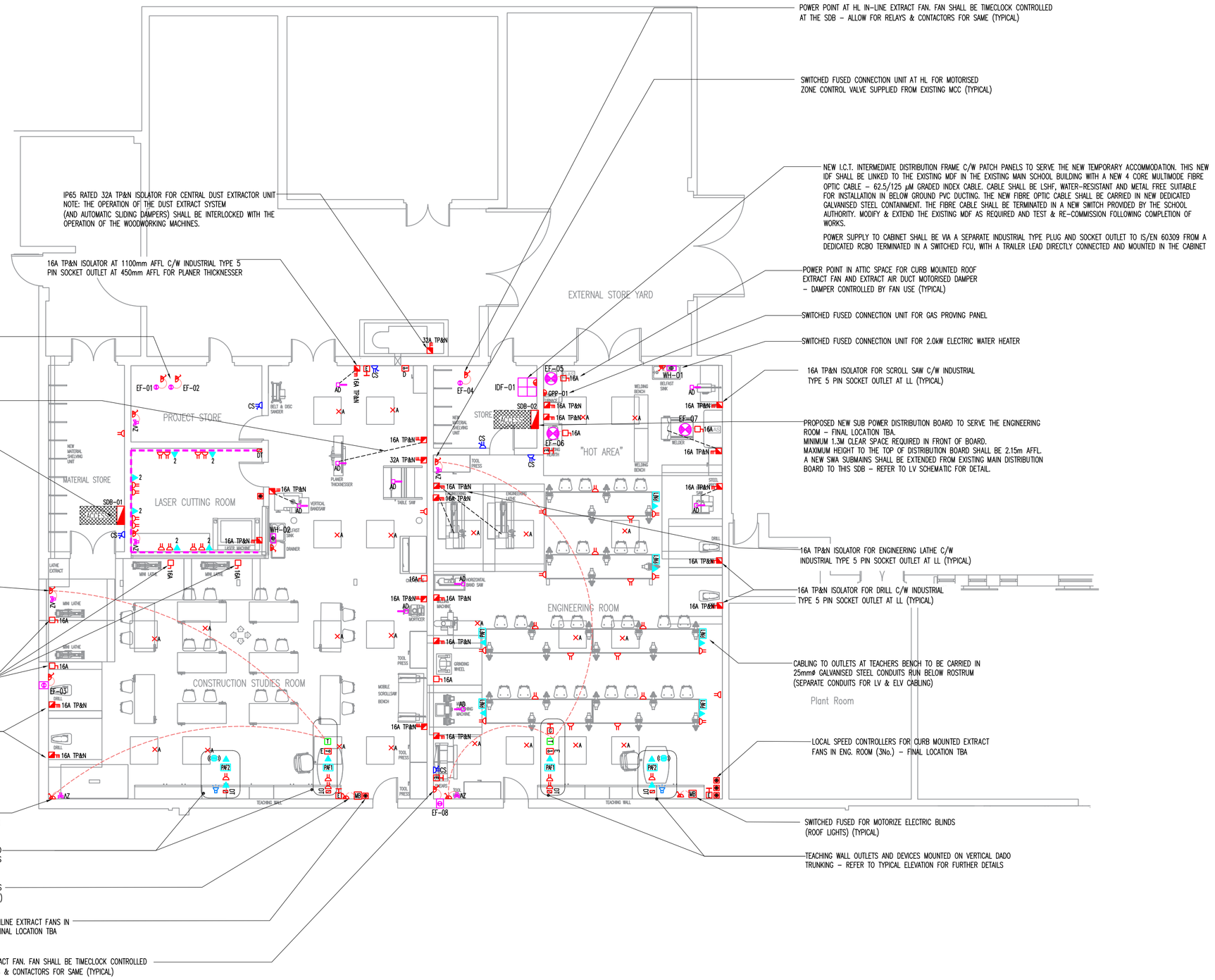

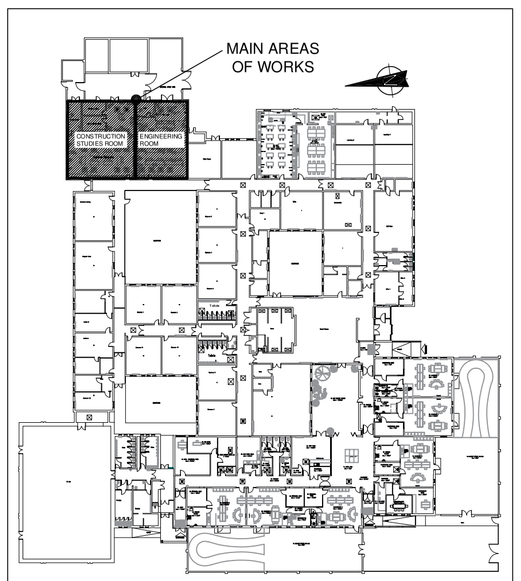

KEYPLAN - GROUND FLOOR (NTS)

Revision	Description	Date	Drawn	Checked
A	Tender Issue	29-Jun-2026	KM	JG

GEANEY ENGINEERING CONSULTANTS

STUDIO 22,
WATERFORD BUSINESS PARK,
CORK ROAD,
WATERFORD,
IRELAND.

TEL: 051-879371
FAX: 051-853188
EMAIL: info@geaneyengineering.ie

project title:
Climate Action Summer Works Scheme
Construction Studies & Engineering Room
Refurbishment at
Rath Dara Community College,
Blanchardstown, Dublin 15, Co. Dublin

drawing title:
Proposed Electrical General Services Layout

scale: 1:100 @A1

architect: Dermot F Geoghegan Architects LTD

project number: 0839

drawing number: Volume A. 3.3 - EL101

A1

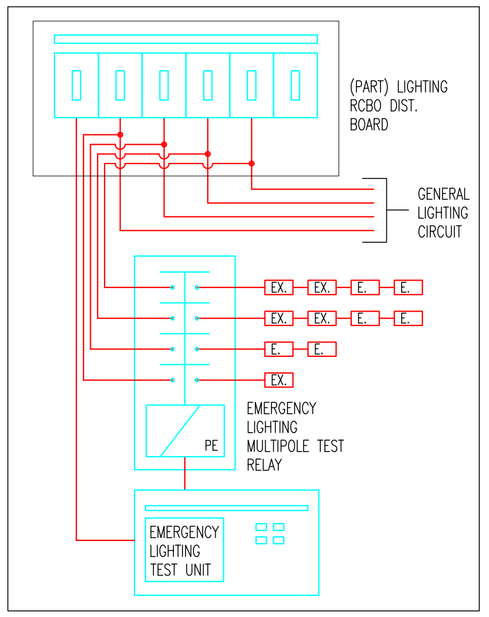

TYPICAL DETAIL OF EMERGENCY LIGHTING TEST FACILITY (NTS)

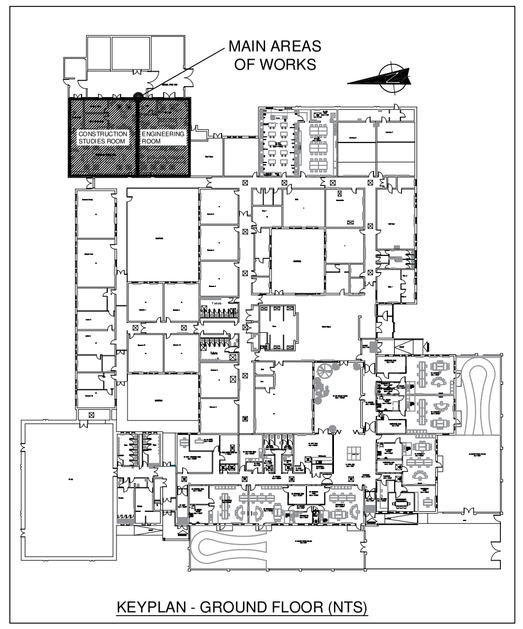

KEYPLAN - GROUND FLOOR (NTS)

GENERAL NOTES

1) Do not scale services equipment from this drawing.
2) All dimensions should be checked on site.
3) Any drawing errors or divergences should be brought to the attention of Geaney Engineering Consultants at the address shown below.
4) Drawing to be read in conjunction with all other drawings and documentation.

NOTES:

1. THIS DRAWING SHALL BE READ IN CONJUNCTION WITH ALL MECHANICAL, ELECTRICAL, ARCHITECTURAL AND STRUCTURAL DRAWINGS & SPECIFICATIONS.
2. THE ELECTRICAL CONTRACTOR SHALL CO-ORDINATE ALL SERVICES FULLY WITH ALL TRADES BEFORE COMMENCING WORK.
3. DO NOT SCALE THIS DRAWING. ALL DIMENSIONS SHALL BE TAKEN ON SITE.
4. THE ELECTRICAL CONTRACTOR SHALL BE RESPONSIBLE FOR PROVIDING ALL NECESSARY INFORMATION TO ALLOW PROPER CO-ORDINATION OF ALL SERVICES.
5. EXTRA COSTS INCURRED DUE TO THE CO-ORDINATION EXERCISE NOT BEING COMPLETED WILL NOT BE ACCEPTED BY THE ENGINEER.
6. EXACT LOCATION OF ALL SERVICES SHALL BE AGREED WITH THE EMPLOYERS REPRESENTATIVE PRIOR TO COMMENCEMENT ON SITE.
7. ALL SERVICES AS SHOWN ON THIS DRAWING SHALL BE INCLUDED IN THE FINAL TENDER PRICE.
8. SAMPLE OF ALL EQUIPMENT SHALL BE APPROVED BY CLIENT, ARCHITECT AND BUILDING SERVICES ENGINEER PRIOR TO ORDERING.
9. ALL DIMENSIONS IN MILLIMETRES UNLESS STATED OTHERWISE.

GENERAL LIGHTING NOTES:

1. ELECTRICAL INSTALLATION SHALL BE INSTALLED & CERTIFIED IN ACCORDANCE WITH I.S. 10101: 2020 NATIONAL RULES FOR ELECTRICAL INSTALLATIONS.
2. SURFACE MOUNTED LIGHT SWITCHES IN MAIN STREAM AREAS SHALL HAVE METALCLAD FINISH WITHOUT KNOCKOUTS AND TGD PART 'M' COMPLIANT FRONT PLATES UNLESS INDICATED OTHERWISE.
3. SURFACE MOUNTED GALVANISED STEEL CONDUIT DROPS ARE NOT ALLOWED IN CORRIDORS AND CIRCULATION AREAS UNLESS AGREED OTHERWISE BY THE DESIGN TEAM. CONDUIT DROPS IN CORRIDORS AND CIRCULATION AREAS SHALL GENERALLY BE IN AN ADJACENT ROOM OR RECESSED IN STUD PARTITIONS/DRY LINING OR CHASED INTO MASONRY WALLS IF NECESSARY – LIAISE WITH MAIN CONTRACTOR.
4. ALL LIGHTING LAYOUTS IN ROOMS SHALL BE REVIEWED ON SITE WITH EMPLOYERS REPRESENTATIVE PRIOR TO INSTALLATION.
5. THE CONTRACTOR SHALL ALLOW FOR COMMISSIONING THE LIGHTING CONTROLS WITH THE LIGHTING SUPPLIER AS PER SPECIFICATION. LUX LEVELS AND LIGHTING CONTROLS STRATEGY AS HIGHLIGHTED IN THE SPECIFICATIONS.
6. SEPARATE 1.5mm.sq. CPC'S TO BE PROVIDED WITH EACH LIGHTING CIRCUIT.
7. THE ELECTRICAL CONTRACTOR SHALL ALLOW FOR SUPPLYING AND INSTALLING 2-CORE LOW VOLTAGE CABLES BETWEEN LIGHT FITTINGS ON THE SAME LIGHTING CIRCUIT FOR LIGHTING CONTROL.
8. LIGHTING CONTROLS IN MAIN STREAM TEACHING SPACES AND OFFICES SHALL HAVE "ON/OFF/DIMMING" MANUAL SWITCHING ARRANGEMENTS VIA PUSH TYPE RETRACTABLE LIGHT SWITCHES AND SHALL HAVE LIGHTING CONTROLS BASED ON PHOTOCELL CONTROL TO TURN OFF THE LIGHTS WHEN DAYLIGHT LEVELS ARE ADEQUATE, DAYLIGHT SENSING TO DIM THE LIGHTS AS REQUIRED TO "OFF" IN RESPONSE TO THE CHANGES IN DAYLIGHT LEVELS AND ABSENCE DETECTION TO TURN OFF LIGHTS WHEN ROOMS ARE UNOCCUPIED.
9. ALLOW FOR FITTING GALVANISED MESH CAGES TO EXTERNAL LIGHT FITTINGS. ALL SHALL BE SUPPLIED AND FITTED BY THE ELECTRICAL CONTRACTOR.
10. FACADE MOUNTED LIGHTING CIRCUITS ARE TO BE CONTROLLED BY PHOTOCELL, TIME CLOCK AND KEY OPERATED HAND-OFF-AUTO SWITCH.
11. LIGHT FITTINGS IN CLASSROOMS SHALL BE INSTALLED PERPENDICULAR TO TEACHING WALL.
12. THE LIGHTING INSTALLATION IS NOT TO BE USED FOR WORKING ILLUMINANCE DURING THE CONSTRUCTION PERIOD.
13. PROTECTIVE COVERING IS TO REMAIN ON ALL LUMINAIRES UNTIL IMMEDIATELY PRIOR TO HAND OVER.
14. ALL CIRCUITS SHALL BE PROTECTED BY AN RCBO.
15. SUB-CIRCUIT CABLING SHALL GENERALLY BE PVC SINGLES CARRIED IN GALVANISED STEEL CONTAINMENT THROUGHOUT. PRIMARY CONTAINMENT SHALL GENERALLY BE SUITABLY SIZED GALVANISED STEEL CABLE TRUNKING. SECONDARY CONTAINMENT SHALL GENERALLY BE GALVANISED STEEL CONDUITS UNLESS INDICATED OTHERWISE.
16. ANNULAR SPACE IN STEEL CONDUITS AT COUPLERS WHERE THEY CONNECT TO OUTLETS, SWITCHES AND DEVICES IN HEATED SPACES MUST BE SEALED WITH A SUITABLE MASTIC TO PREVENT ENTRY OF WARM HUMID AIR AND POTENTIAL FOR CONDENSATION WITHIN THE ELECTRICAL CONTAINMENT SYSTEM.
17. THERE SHALL BE A MAXIMUM OF 10No. FITTINGS PER CIRCUIT WITH EACH CIRCUIT PROTECTED BY AN RCBO.
18. ANY SINGLE PHASE CIRCUIT FED DIRECTLY FROM A THREE PHASE DISTRIBUTION BOARD SHALL HAVE THE APPROPRIATE PHASE COLOUR EXTENDED INTO THE SINGLE PHASE CIRCUITS FED FROM THAT PHASE.
19. WHERE WIRING OF MORE THAN ONE PHASE ENTERS A SWITCH BOX, VERTICAL BARRIERS SHALL BE PROVIDED BETWEEN PHASES AND "RED" WARNING PLATES ENGRAVED "DANGER 380 VOLTS" SHALL BE PROVIDED BELOW THE COVER PLATE AND FIXED TO THE SWITCH.
20. ALL NEW LIGHT SWITCHES SHALL BE TGD PART 'M' COMPLIANT. FRONT PLATES OF ALL SHALL BE VISUALLY CONTRASTING WITH BACKGROUND.

EMERGENCY LIGHTING NOTES:

1. EMERGENCY LIGHTING SHALL COMPLY WITH I.S. 3217:2023 (NEW WORKS).
2. FINAL LOCATIONS OF EMERGENCY LIGHTING TO COMPLY WITH FIRE CERTIFICATE.
3. EMERGENCY LIGHTING TO BE CO-ORDINATED WITH SAFETY SIGNS AND FIRST AID WHICH ARE SUBJECT TO STATUTORY REQUIREMENT.
4. HANDOVER DRAWINGS AND DOCUMENTS SHALL BE PRODUCED IN ACCORDANCE WITH CLAUSES 6.1, 6.2 AND 6.3 IF I.S. EN 50172.
5. EMERGENCY LIGHTING TEST UNIT TO BE INSTALLED ON ALL ELECTRICAL BOARDS. SEE SPECIFICATION FOR FURTHER DETAILS.
6. ALL EMERGENCY LIGHT FITTINGS, EXIT SIGNS ETC SHALL BE WIRED VIA INTERFACE UNITS AND CONTROLLED BY CENTRAL TEST UNIT ON RESPECTIVE DB.
7. THE ELECTRICAL CONTRACTOR SHALL ENSURE THE EMERGENCY LIGHTING INSTALLATION PROVIDES THE REQUIRED LUX LEVELS AT POINTS OF EMPHASIS IN ACCORDANCE WITH I.S. 3217:2023

GENERAL & EMERGENCY LIGHTING LEGEND:

- LIGHT SWITCH – ONE WAY
- LIGHT SWITCH – TWO WAY
- P✱ P.I.R. MOVEMENT SENSOR
- LCM LIGHTING CONTROL MODULE
- V CORROSION PROOF 41W LED SURFACE MOUNTED LUMINAIRE – IP66 RATED
- R/E 15W LED WALL MOUNTED LUMINARE WITH IK10 POLYCARBONATE COVER AND EMERGENCY BATTERY PACK – IP66 RATED
- E1 SURFACE MOUNTED EMERGENCY 4W LED – IP65 RATED
- MAINTAINED TYPE LED EXIT SIGN
- WP MAINTAINED TYPE LED EXIT SIGN – IP65 RATED

Revision	Description	Date	Drawn	Checked
A	Tender Issue	29-Jun-2026	KM	JG

GEANEY ENGINEERING CONSULTANTS

STUDIO 22,
WATERFORD BUSINESS PARK,
CORK ROAD,
WATERFORD,
IRELAND.

TEL: 051-879371
FAX: 051-853188
EMAIL: info@geaneyengineering.ie

project title:
Climate Action Summer Works Scheme
Construction Studies & Engineering Room
Refurbishment at
Rath Dara Community College,
Blanchardstown, Dublin 15, Co. Dublin

drawing title:
Proposed General & Emergency Lighting Layout

scale: 1:100 @A1

architect: Dermot F Geoghegan Architects LTD

project number: 0839

drawing number: Volume A. 3.3 - EL102

A1

THE MAIN CONTRACTOR AND M&E CONTRACTORS SHALL LIAISE PRIOR TO COMMENCING WORKS SUCH THAT:
- MINIMUM CLEAR SPACE OF 500mm IS MAINTAINED AROUND AND BELOW EACH SMOKE DETECTOR
- MINIMUM CLEAR SPACE OF 1000mm IS MAINTAINED BETWEEN MECHANICAL VENTILATION TERMINALS AND SMOKE DETECTORS

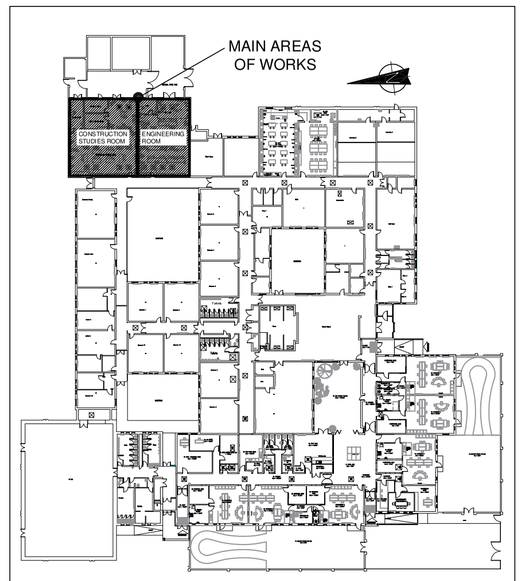

KEYPLAN - GROUND FLOOR (NTS)

GENERAL NOTES

1) Do not scale services equipment from this drawing.
2) All dimensions should be checked on site.
3) Any drawing errors or divergences should be brought to the attention of Geaney Engineering Consultants at the address shown below.
4) Drawing to be read in conjunction with all other drawings and documentation.

NOTES:

1. THIS DRAWING SHALL BE READ IN CONJUNCTION WITH ALL MECHANICAL, ELECTRICAL, ARCHITECTURAL AND STRUCTURAL DRAWINGS & SPECIFICATIONS.
2. THE ELECTRICAL CONTRACTOR SHALL CO-ORDINATE ALL SERVICES FULLY WITH ALL TRADES BEFORE COMMENCING WORK.
3. DO NOT SCALE THIS DRAWING. ALL DIMENSIONS SHALL BE TAKEN ON SITE.
4. THE ELECTRICAL CONTRACTOR SHALL BE RESPONSIBLE FOR PROVIDING ALL NECESSARY INFORMATION TO ALLOW PROPER CO-ORDINATION OF ALL SERVICES.
5. EXTRA COSTS INCURRED DUE TO THE CO-ORDINATION EXERCISE NOT BEING COMPLETED WILL NOT BE ACCEPTED BY THE ENGINEER.
6. EXACT LOCATION OF ALL SERVICES SHALL BE AGREED WITH THE EMPLOYERS REPRESENTATIVE PRIOR TO COMMENCEMENT ON SITE.
7. ALL SERVICES AS SHOWN ON THIS DRAWING SHALL BE INCLUDED IN THE FINAL TENDER PRICE.
8. SAMPLE OF ALL EQUIPMENT SHALL BE APPROVED BY CLIENT, ARCHITECT AND BUILDING SERVICES ENGINEER PRIOR TO ORDERING.
9. ALL DIMENSIONS IN MILLIMETRES UNLESS STATED OTHERWISE.

FIRE ALARM & DETECTION NOTES:

1. THE FIRE ALARM SYSTEM SHALL COMPLY WITH I.S. 3218:2024
2. ALL EQUIPMENT REQUIRED TO PROVIDE A COMPLETE AND WORKING FIRE ALARM SYSTEM AS INDICATED ON THE DRAWINGS IS TO BE SUPPLIED, INSTALLED AND COMMISSIONED UNDER THIS CONTRACT.
3. ALLOW FOR RECOMMISSIONING THE ENTIRE EXISTING FIRE ALARM SYSTEM IN THE BUILDING/S FOLLOWING COMPLETION OF WORKS. IT SHALL BE THE ELECTRICAL CONTRACTORS RESPONSIBILITY TO SURVEY THE BUILDING/S TO DETERMINE THE EXACT LOCATION OF THE EXISTING FIRE ALARM CONTROL PANEL.
4. FIRE ALARM & DETECTION CABLING SHALL BE ENHANCED GRADE 120 AS STATED IN BS5839-1.
5. PRIMARY CONTAINMENT FOR FIRE ALARM & DETECTION CABLING SHALL BE DEDICATED GALVANISED STEEL CABLE TRAY. CABLING FROM PRIMARY CONTAINMENT TO INDIVIDUAL DEVICES (<2.0m) SHALL BE CLIPPED TO STRUCTURE WITH P-CLIPS RATED TO WITHSTAND A SIMILAR TEMPERATURE AND DURATION TO THAT OF THE CABLING (ENHANCED GRADE 120). THE MAXIMUM LENGTH OF CABLING TO BE RUN WITHOUT CABLE TRAY SHALL BE 2.0m. VERTICAL DROPS TO WALL MOUNTED DEVICES SHALL BE CARRIED IN 25ø GALVANISED STEEL CONDUITS.
6. MANUAL CALL POINTS SHALL BE SEMI-RECESSED C/W RECESSED GALVANISED STEEL BACKBOXES UNLESS AGREED OTHERWISE BY THE DESIGN TEAM. GALVANISED STEEL CONDUITS TO SAME SHALL BE RECESSED IN STUD PARTITIONS/DRY LINING OR CHASED INTO MASONRY WALLS IF NECESSARY - LIAISE WITH MAIN CONTRACTOR. INTUMESCENT FIRE PADS TO BE FIXED TO THE REAR OF BACK BOXES RECESSED IN STUD PARTITIONS. THE INTEGRITY OF THE FIRE RATED PARTITIONS MUST BE MAINTAINED.
7. MANUAL CALL POINTS SHALL BE INSTALLED AT 1200mm A.F.F.L. AND SHALL BE LOCATED IN EASILY ACCESSIBLE, WELL ILLUMINATED AND CONSPICUOUS POSITIONS THAT ARE FREE FROM OBSTRUCTION.
8. SURFACE MOUNTED GALVANISED STEEL CONDUIT DROPS ARE NOT ALLOWED IN CORRIDORS AND CIRCULATION AREAS UNLESS AGREED OTHERWISE BY THE DESIGN TEAM. CONDUIT DROPS IN CORRIDORS AND CIRCULATION AREAS SHALL GENERALLY BE IN AN ADJACENT ROOM OR RECESSED IN STUD PARTITIONS/DRY LINING OR CHASED INTO MASONRY WALLS IF NECESSARY - LIAISE WITH MAIN CONTRACTOR.
9. ALL FIRE ALARM AUDIBLE SOUNDER DEVICES SHOULD HAVE A SIMILAR SOUND AND SHALL BE DISTINCT FROM ANY OTHER AUDIBLE ALARMS.
10. FIRE ALARM DETECTORS TO BE C/W CONDITION INDICATING LIGHT.
11. INTERFACE UNIT POSITIONS SHOWN ARE INDICATIVE ONLY TO INDICATE EQUIPMENT TO BE INTERFACED. GENERALLY INTERFACE UNITS SHALL BE LOCATED IN ELECTRICAL SWITCHROOMS OR IN OTHER AGREED LOCATIONS.
12. THE MAIN CONTRACTOR AND M&E CONTRACTORS SHALL LIAISE PRIOR TO COMMENCING WORKS SUCH THAT:
    - MINIMUM CLEAR SPACE OF 500mm IS MAINTAINED AROUND AND BELOW EACH SMOKE DETECTOR.
    - MINIMUM CLEAR SPACE OF 1000mm IS MAINTAINED BETWEEN MECHANICAL VENTILATION TERMINALS AND SMOKE DETECTORS.

INTRUDER ALARM NOTES:

1. THE ELECTRICAL CONTRACTOR SHALL INSTALL AND COMMISSION A FULLY MONITORED INTRUDER ALARM SYSTEM.
2. THE INTRUDER ALARM (AND FIRE ALARM) SHALL BE CONNECTED TO A REMOTE 24-HOUR MONITORING STATION.
3. ALL SURFACE MOUNTED INTRUDER ALARM CABLING SHALL BE CONCEALED IN PLASTIC TRUNKING, LOW VOLTAGE COMPARTMENTS OR ATTACHED TO CABLE TRAY.
4. THE ELECTRICAL CONTRACTOR SHALL ALLOW FOR INTRUDER ALARM EXPANDER UNITS AS REQUIRED.
5. THE ELECTRICAL CONTRACTOR SHALL ALLOW FOR POWER SUPPLIES & ELECTRICAL CONNECTIONS TO ALL INTRUDER ALARM DEVICES IDENTIFIED.
6. INTRUDER ALARM KEYPAD SHALL FINISH FLUSH C/W RECESSED GALVANISED STEEL BACKBOX, GALVANISED STEEL CONDUITS TO SAME SHALL BE RECESSED IN STUD PARTITIONS/DRY LINING OR CHASED INTO MASONRY WALLS IF NECESSARY - LIAISE WITH MAIN CONTRACTOR. INTUMESCENT FIRE PADS TO BE FIXED TO THE REAR OF BACK BOXES RECESSED IN STUD PARTITIONS. THE INTEGRITY OF THE FIRE RATED PARTITIONS MUST BE MAINTAINED.

FIRE ALARM & DETECTION LEGEND:

- S — SMOKE DETECTOR
- S — SMOKE DETECTOR WITH SOUNDER BASE
- S — SMOKE DETECTOR WITH SOUNDER BASE & LED STROBE
- MANUAL CALL POINT (RESETTABLE VIA KEY)
- FU — FIRE ALARM INTERFACE UNIT

INTRUDER ALARM LEGEND:

- INTRUDER ALARM DUAL TECH PASSIVE INFRA-RED MOTION DETECTOR

Revision	Description	Date	Drawn	Checked
A	Tender Issue	29-Jun-2026	KM	JG

GEANEY ENGINEERING CONSULTANTS
STUDIO 22,
WATERFORD BUSINESS PARK,
CORK ROAD,
WATERFORD,
IRELAND.
TEL: 051-879371
FAX: 051-853188
EMAIL: info@geaneyengineering.ie

project title:
Climate Action Summer Works Scheme
Construction Studies & Engineering Room
Refurbishment at
Rath Dara Community College,
Blanchardstown, Dublin 15, Co. Dublin

drawing title:
Proposed Fire Alarm & Detection and Protective Services Layout

scale: 1:100 @A1

architect: Dermot F Geoghegan Architects LTD

project number: 0839

drawing number: Volume A. 3.3 - EL103

A1

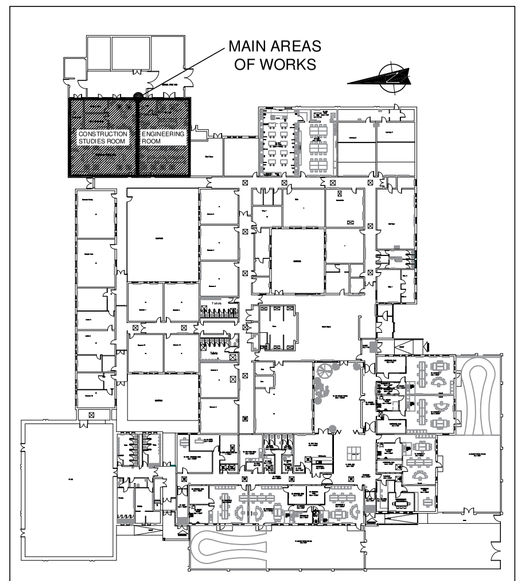

KEYPLAN - GROUND FLOOR (NTS)

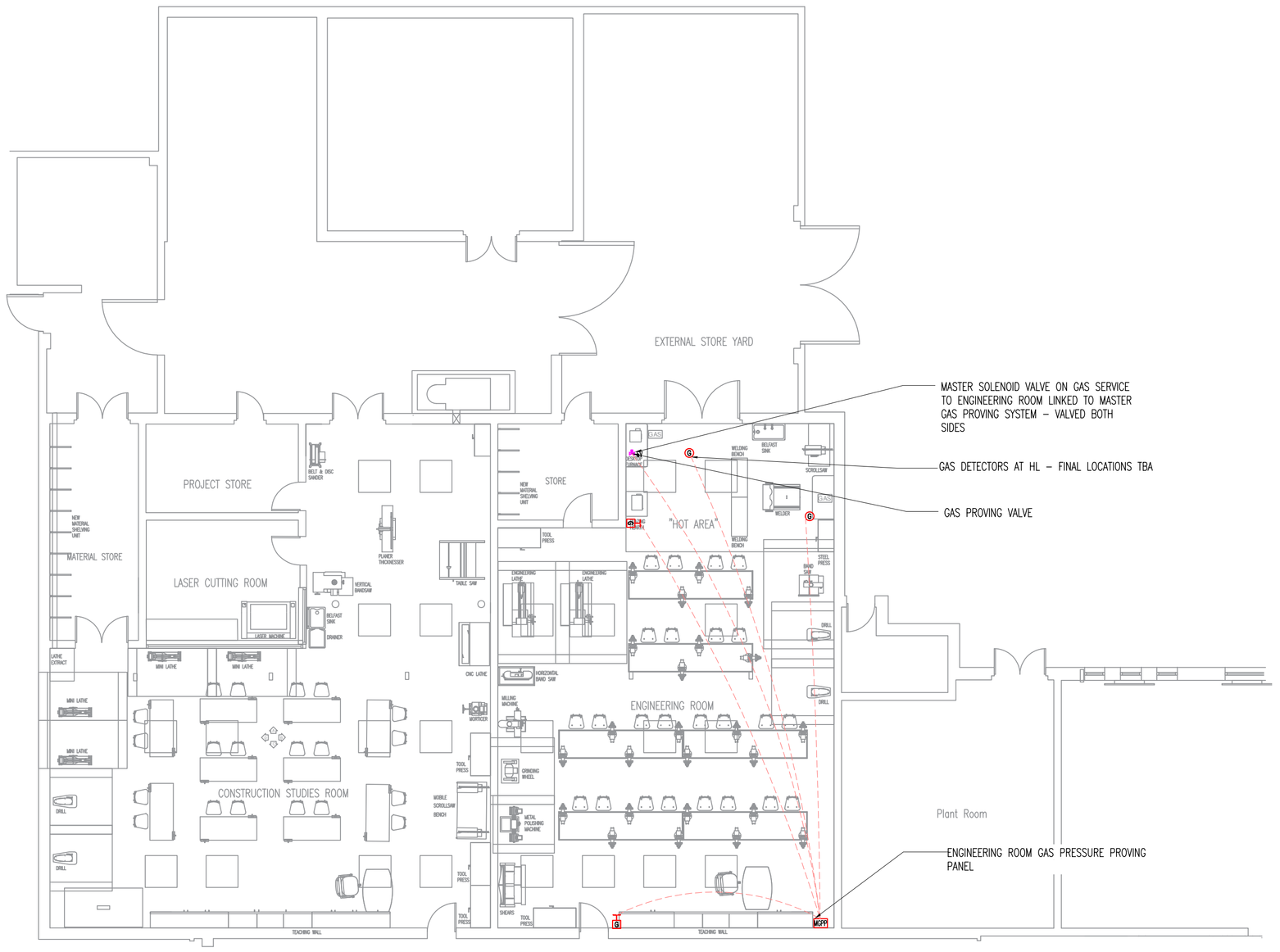

GENERAL NOTES

1) Do not scale services equipment from this drawing.
2) All dimensions should be checked on site.
3) Any drawing errors or divergences should be brought to the attention of Geaney Engineering Consultants at the address shown below.
4) Drawing to be read in conjunction with all other drawings and documentation.

NOTES:

1. THIS DRAWING SHALL BE READ IN CONJUNCTION WITH ALL MECHANICAL, ELECTRICAL, ARCHITECTURAL AND STRUCTURAL DRAWINGS & SPECIFICATIONS.
2. THE ELECTRICAL CONTRACTOR SHALL CO-ORDINATE ALL SERVICES FULLY WITH ALL TRADES BEFORE COMMENCING WORK.
3. DO NOT SCALE THIS DRAWING. ALL DIMENSIONS SHALL BE TAKEN ON SITE.
4. THE ELECTRICAL CONTRACTOR SHALL BE RESPONSIBLE FOR PROVIDING ALL NECESSARY INFORMATION TO ALLOW PROPER CO-ORDINATION OF ALL SERVICES.
5. EXTRA COSTS INCURRED DUE TO THE CO-ORDINATION EXERCISE NOT BEING COMPLETED WILL NOT BE ACCEPTED BY THE ENGINEER.
6. EXACT LOCATION OF ALL SERVICES SHALL BE AGREED WITH THE EMPLOYERS REPRESENTATIVE PRIOR TO COMMENCEMENT ON SITE.
7. ALL SERVICES AS SHOWN ON THIS DRAWING SHALL BE INCLUDED IN THE FINAL TENDER PRICE.
8. SAMPLE OF ALL EQUIPMENT SHALL BE APPROVED BY CLIENT, ARCHITECT AND BUILDING SERVICES ENGINEER PRIOR TO ORDERING.
9. ALL DIMENSIONS IN MILLIMETRES UNLESS STATED OTHERWISE.

GAS DETECTION NOTES:

1. THE ELECTRICAL CONTRACTOR SHALL ALLOW FOR ALL WIRING FOR THE GAS DETECTION SYSTEM.
2. ALL ELECTRICAL WIRING TO GAS PANELS AND ASSOCIATED GAS EQUIPMENT SHALL BE AS RECOMMENDED BY THE MANUFACTURER'S SPECIFICATIONS – TO BE WIRED IN A SEPARATE DEDICATED CONDUIT SYSTEM.
3. MECHANICAL AND ELECTRICAL CONTRACTORS SHALL LIAISE AND ARRANGE FOR INTERFACE BETWEEN GAS SAFETY INSTALLATIONS AND ELECTRICAL INSTALLATIONS.
4. ALL WALL MOUNTED DEVICES SHALL BE FLUSH MOUNTED C/W GALVANISED STEEL BACKBOXES, GALVANISED STEEL CONDUITS TO SAME SHALL BE RECESSED IN STUD PARTITIONS/RECESSED IN DRY LINING/CHASED INTO MASONRY WALLS. ALLOW FOR INTUMESCENT FIRE PADS FIXED TO THE REAR OF BACK BOXES WHICH PENETRATE STUD WALLS.

LEGEND:

G	GAS DETECTOR
C	CARBON MONOXIDE DETECTOR
GPP	GAS PROVING PANEL (KEY OPERATED) C/W INTEGRAL EMERGENCY GAS KNOCK OUT POINT
MGPP	MASTER GAS PRESSURE PROVING PANEL (KEY OPERATED) C/W 7 DAY TIME CLOCK CONTROL – INTERFACED WITH FIRE ALARM SYSTEM
SV	GAS SOLENOID VALVE
G	GAS EMERGENCY KNOCK OUT POINT

Revision	Description	Date	Drawn	Checked
A	Tender Issue	29-Jun-2026	KM	JG

GEANEY ENGINEERING CONSULTANTS
STUDIO 22,
WATERFORD BUSINESS PARK,
CORK ROAD,
WATERFORD,
IRELAND.
TEL: 051-879371
FAX: 051-853188
EMAIL: info@geaneyengineering.ie

project title:
Climate Action Summer Works Scheme
Construction Studies & Engineering Room
Refurbishment at
Rath Dara Community College,
Blanchardstown, Dublin 15, Co. Dublin

drawing title:
Gas Detection Layout

scale: 1:100 @A1

architect: Dermot F Geoghegan Architects LTD

project number: 0839

drawing number: Volume A. 3.3 - EL104

A1

NOTES:
1. LIAISE WITH STRUCTURAL ENGINEER PRIOR TO COMMENCING WORK.
2. ALL THREADED RODS AND GALVANISED STEEL SUPPORTS TO BE C/W PROPRIETARY PVC END CAPS.
3. FINAL SUPPORT DETAILS TO BE REVIEWED PRIOR TO COMMENCING WORKS.
4. ALL SUPPORTS AND FIXINGS SHALL BE UNISTRUT OR EQUIVALENT.
5. ALL PENETRATIONS THROUGH FIRE RATED CEILINGS SHALL BE SUITABLY FIRE SEALED.

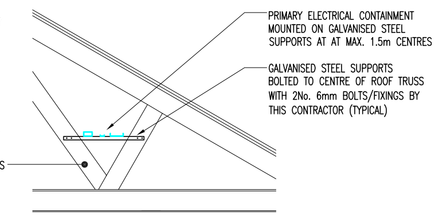

TYPICAL PRIMARY ELECTRICAL CONTAINMENT DETAIL IN ATTIC SPACE (NTS)

ALL SERVICE PENETRATIONS THROUGH FIRE-RATED ELEMENTS, INCLUDING WALLS, FLOORS, CEILINGS, AND SHAFTS, SHALL BE SEALED WITH FIRE RETARDING SEALANT TO MAINTAIN THE REQUIRED FIRE RESISTANCE PERIOD OF THE ELEMENT PENETRATED.

FIRE STOPPING SYSTEMS SHALL BE TESTED AND CERTIFIED IN ACCORDANCE WITH RELEVANT REGULATIONS AS IS EN 1366 & IS EN 13501

FIRE STOPPING SHALL BE INSTALLED IN ACCORDANCE WITH MANUFACTURER'S TESTED DETAILS AND BY COMPETENT SPECIALIST

COORDINATION WITH THE FIRE STRATEGY AND ARCHITECTURAL DRAWINGS IS REQUIRED PRIOR TO INSTALLATION

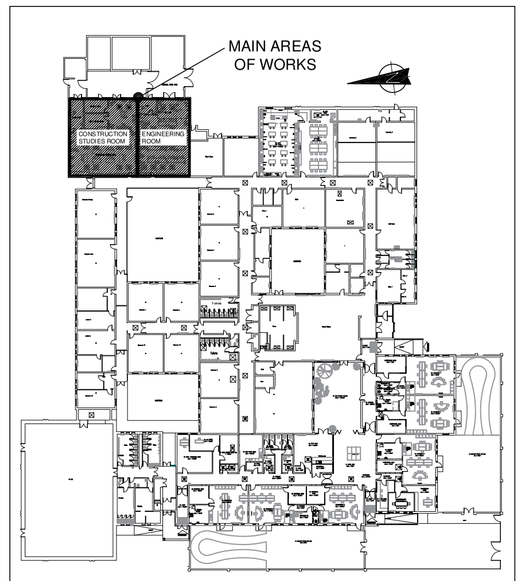

KEYPLAN - GROUND FLOOR (NTS)

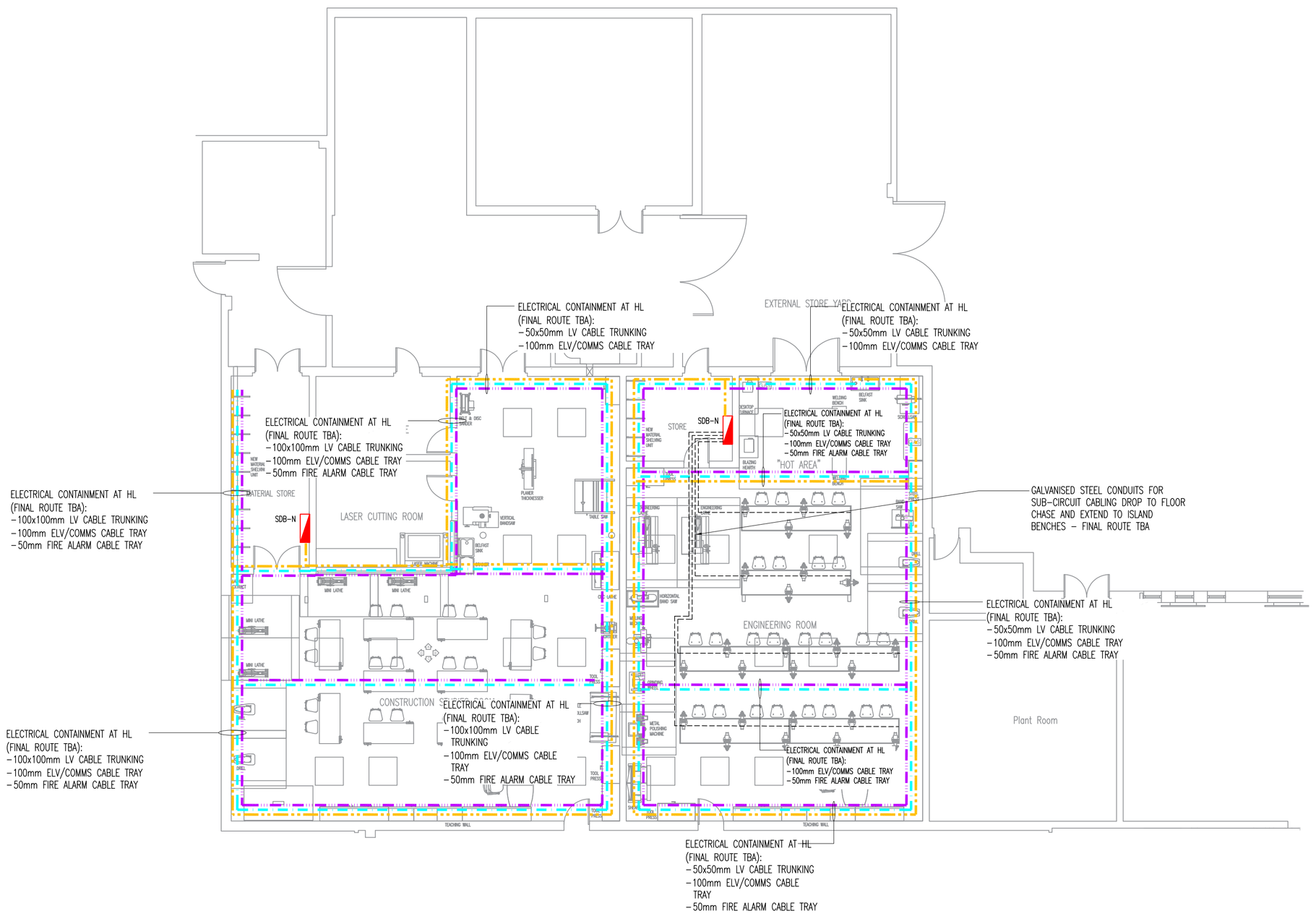

GENERAL NOTES

1) Do not scale services equipment from this drawing.
2) All dimensions should be checked on site.
3) Any drawing errors or divergences should be brought to the attention of Geaney Engineering Consultants at the address shown below.
4) Drawing to be read in conjunction with all other drawings and documentation.

NOTES:
1. THIS DRAWING SHALL BE READ IN CONJUNCTION WITH ALL MECHANICAL, ELECTRICAL, ARCHITECTURAL AND STRUCTURAL DRAWINGS & SPECIFICATIONS.
2. THE ELECTRICAL CONTRACTOR SHALL CO-ORDINATE ALL SERVICES FULLY WITH ALL TRADES BEFORE COMMENCING WORK.
3. DO NOT SCALE THIS DRAWING. ALL DIMENSIONS SHALL BE TAKEN ON SITE.
4. THE ELECTRICAL CONTRACTOR SHALL BE RESPONSIBLE FOR PROVIDING ALL NECESSARY INFORMATION TO ALLOW PROPER CO-ORDINATION OF ALL SERVICES.
5. EXTRA COSTS INCURRED DUE TO THE CO-ORDINATION EXERCISE NOT BEING COMPLETED WILL NOT BE ACCEPTED BY THE ENGINEER.
6. EXACT LOCATION OF ALL SERVICES SHALL BE AGREED WITH THE EMPLOYERS REPRESENTATIVE PRIOR TO COMMENCEMENT ON SITE.
7. ALL SERVICES AS SHOWN ON THIS DRAWING SHALL BE INCLUDED IN THE FINAL TENDER PRICE.
8. SAMPLE OF ALL EQUIPMENT SHALL BE APPROVED BY CLIENT, ARCHITECT AND BUILDING SERVICES ENGINEER PRIOR TO ORDERING.
9. ALL DIMENSIONS IN MILLIMETRES UNLESS STATED OTHERWISE.

ELECTRICAL CONTAINMENT NOTES:
1. ALL CABLE LADDERS AND TRAYS SHALL BE MEDIUM DUTY GALVANISED STEEL IN ACCORDANCE WITH I.S. EN 61537:2007 UNLESS INDICATED OTHERWISE.
2. THE ELECTRICAL CONTRACTOR IS RESPONSIBLE FOR THE INSTALLATION & LAYOUT OF THE CABLE CARRIER SYSTEM WHICH SHALL INCLUDE A GALVANISED STEEL TRAY, TRUNKING & CONDUIT SYSTEM THROUGHOUT.
3. ALL ELECTRICAL CONTAINMENT AND ELECTRICAL SERVICES INDICATED & NOTED ON THIS DRAWING ARE PART OF THE NEW INSTALLATION UNLESS INDICATED OTHERWISE.
4. THE ELECTRICAL CONTRACTOR SHALL PROVIDE ALL BENDS, TEES AND CROSS-OVERS THAT ARE REQUIRED TO MEET CURRENT ETCI STANDARDS. THE ROUTES INDICATED ARE MAIN ROUTES ONLY. THE ELECTRICAL CONTRACTOR SHALL BE RESPONSIBLE FOR THE PROVISION OF ALL TRAY AND TRUNKING TO ENSURE MECHANICAL PROTECTION OF ALL CABLING.
5. ALL CONTAINMENT SHALL RUN TRUE TO MAIN BUILDING LINES.
6. PRIMARY CONTAINMENT SHALL GENERALLY BE MOUNTED ON GALVANISED STEEL SUPPORTS SECURED TO THE STRUCTURE AT MAXIMUM 1.2m CENTRES UNLESS INDICATED OTHERWISE.
7. WALL MOUNTED PRIMARY ELECTRICAL CONTAINMENT SHALL BE MOUNTED ON GALVANISED STEEL SUPPORTS ANCHORED TO THE WALL STRUCTURE AT MAXIMUM 1.2m CENTRES.
8. THE ELECTRICAL CONTRACTOR SHALL ALLOW FOR ALL CHANGES OF LEVEL AND VERTICAL CONTAINMENT AS REQUIRED.
9. THE ELECTRICAL CONTRACTOR SHALL ALLOW FOR OFFSETTING AND STACKING ELECTRICAL CONTAINMENT TO COORDINATE WITH SERVICES OPENINGS IN WALLS.
10. THE ELECTRICAL CONTRACTOR SHALL ALLOW FOR GALVANISED STEEL HEADER TRUNKING OVER THE DISTRIBUTION BOARDS.
11. THE ELECTRICAL CONTRACTOR SHALL ALLOW FOR ALL CONTAINMENT IN THE BOILER ROOM AS REQUIRED.
12. SURFACE MOUNTED GALVANISED STEEL CONDUIT DROPS ARE NOT ALLOWED IN CORRIDORS AND CIRCULATION AREAS UNLESS AGREED OTHERWISE BY THE DESIGN TEAM. CONDUIT DROPS IN CORRIDORS AND CIRCULATION AREAS SHALL GENERALLY BE IN AN ADJACENT ROOM OR RECESSED IN STUD PARTITIONS/DRY LINING OR CHASED INTO MASONRY WALLS IF NECESSARY – LIAISE WITH MAIN CONTRACTOR.
13. THE FIRE ALARM & DETECTION SYSTEM CABLING SHALL BE CARRIED IN DEDICATED CONTAINMENT.
14. ALL ELECTRICAL TRUNKING/TRAY PENETRATIONS THROUGH WALLS AND FIRE COMPARTMENTS SHALL BE C/W SUITABLE INTUMESCENT PADS/PILLOWS TESTED TO BS476 PART 22.
15. ANNULAR SPACE IN STEEL CONDUITS AT COUPLERS WHERE THEY CONNECT TO OUTLETS, SWITCHES AND DEVICES IN HEATED SPACES MUST BE SEALED WITH A SUITABLE MASTIC TO PREVENT ENTRY OF WARM HUMID AIR AND POTENTIAL FOR CONDENSATION WITHIN THE ELECTRICAL CONTAINMENT SYSTEM.
16. THIS DRAWING INDICATES PROPOSED PRIMARY ELECTRICAL CONTAINMENT ROUTES ONLY.

ELECTRICAL CONTAINMENT LEGEND:

PROPOSED ROUTE OF CABLE TRUNKING FOR LV CABLING – SIZE AS INDICATED

PROPOSED ROUTE OF CABLE TRAY FOR ELV/COMMS CABLING – SIZE AS INDICATED

PROPOSED ROUTE OF CABLE TRAY FOR FIRE ALARM CABLING – SIZE AS INDICATED

THE ELECTRICAL CONTRACTOR SHALL ALLOW FOR ALL NEW ELECTRICAL CONTAINMENT AS INDICATED AND AS REQUIRED. THE ELECTRICAL CONTRACTOR SHALL RE-USE EXISTING ELECTRICAL CONTAINMENT ON THE GROUND FLOOR WHERE WHERE SUFFICIENT CAPACITY IS AVAILABLE – OVERFILLING OF ELECTRICAL CONTAINMENT WILL NOT BE ACCEPTED – TO BE REVIEWED ON SITE PRIOR TO COMMENCEMENT OF WORKS. FINAL ROUTES OF NEW CONTAINMENT TO BE AGREED

Revision	Description	Date	Drawn	Checked
A	Tender Issue	29-Jun-2026	KM	JG

GEANEY ENGINEERING CONSULTANTS
STUDIO 22,
WATERFORD BUSINESS PARK,
CORK ROAD,
WATERFORD,
IRELAND.
TEL: 051-879371
FAX: 051-853188
EMAIL: info@geaneyengineering.ie

project title:
Climate Action Summer Works Scheme
Construction Studies & Engineering Room
Refurbishment at
Rath Dara Community College,
Blanchardstown, Dublin 15, Co. Dublin

drawing title:
Proposed Electrical
Containment Layout

scale: 1:100 @A1

architect: Dermot F Geoghegan Architects LTD

project number: 0839

drawing number: Volume A. 3.3 - EL105

A1

THE ELECTRICAL CONTRACTOR SHALL COORDINATE DIRECTLY WITH THE MAIN CONTRACTOR TO VERIFY WHETHER EACH INSTALLED MACHINE REQUIRES A SINGLE-PHASE OR THREE-PHASE SUPPLY. FOLLOWING THIS COORDINATION, THE ELECTRICAL CONTRACTOR SHALL PROVIDE AND INSTALL APPROPRIATELY RATED ISOLATORS TO SUIT EACH MACHINE.

EXISTING POWER DISTRIBUTION BOARD – TO BE DISCONNECTED AND REMOVED

ALLOW FOR DISCONNECTING & REMOVING ALL EXISTING GENERAL SERVICES & SMALL POWER SUB-CIRCUITS SERVING THE AREAS OF WORKS TOGETHER WITH ELECTRICAL CONTAINMENT & SUPPORTS.

THE ELECTRICAL CONTRACTOR SHALL VERIFY IF ANY EXISTING GENERAL SERVICES & SMALL POWER SUB-CIRCUITS SUPPLY OUTLETS & POWER POINTS IN AREAS OUTSIDE THE MAINS AREAS OF WORKS. ANY SUCH SUB-CIRCUITS SHALL BE RETAINED – MODIFY & EXTEND AS REQUIRED.

THE ELECTRICAL CONTRACTOR MUST TRACE END-TO-END, VERIFY USAGE & SUITABLY LABEL ALL EXISTING SUB-CIRCUIT CABLING WHICH EXTENDS FROM THE EXISTING POWER DISTRIBUTION BOARDS PRIOR TO COMMENCING DE-INSTALLATION WORKS/MODIFICATIONS.

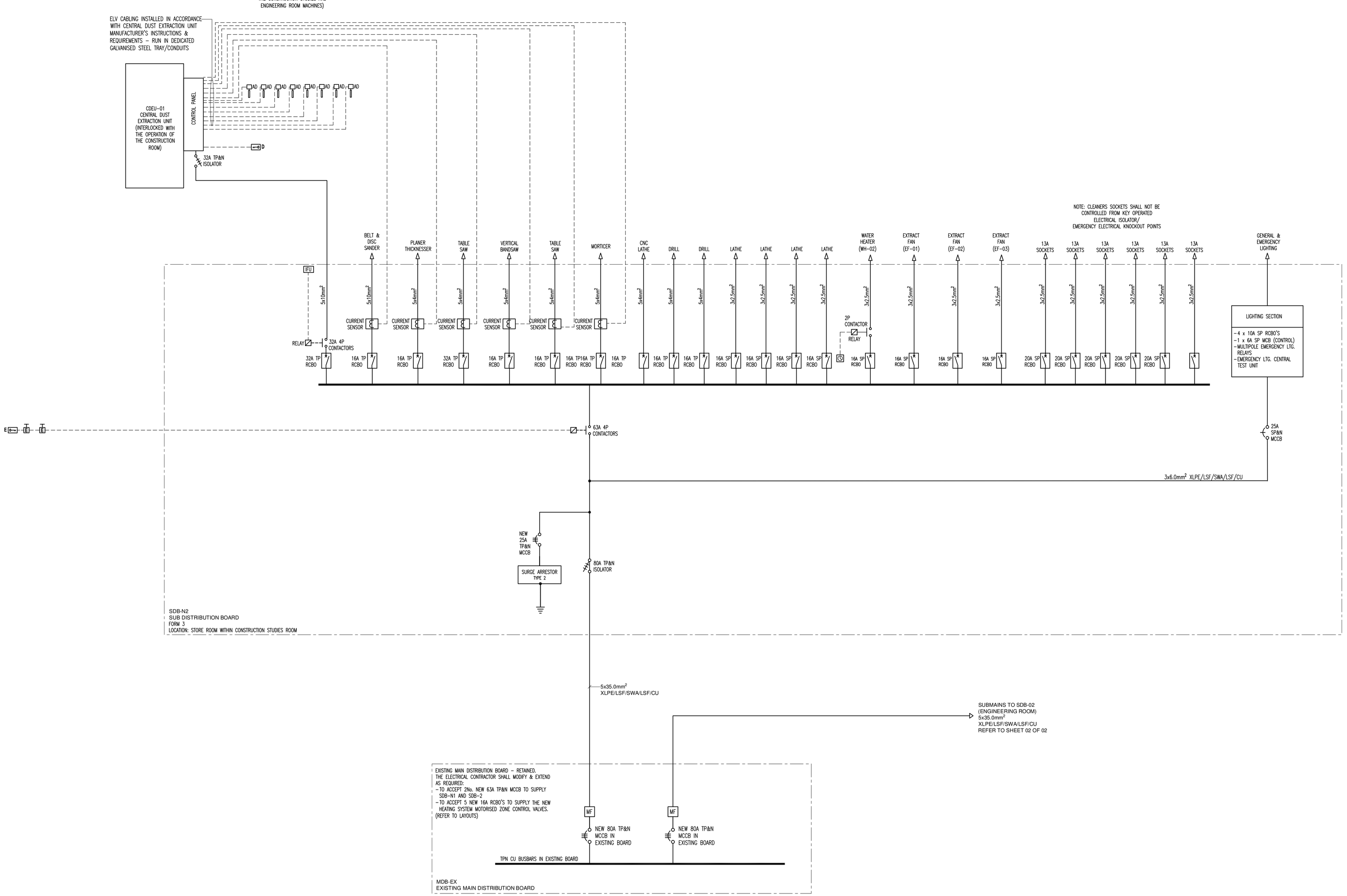

GENERAL NOTES

1) Do not scale services equipment from this drawing.
2) All dimensions should be checked on site.
3) Any drawing errors or divergences should be brought to the attention of Geaney Engineering Consultants at the address shown below.
4) Drawing to be read in conjunction with all other drawings and documentation.

NOTES:

1. ELECTRICAL INSTALLATION SHALL BE INSTALLED & CERTIFIED IN ACCORDANCE WITH I.S. 10101: 2020 NATIONAL RULES FOR ELECTRICAL INSTALLATIONS.
2. ANY SINGLE PHASE CIRCUIT FED DIRECTLY FROM A THREE PHASE DISTRIBUTION BOARD SHALL HAVE THE APPROPRIATE PHASE COLOUR EXTENDED INTO THE SINGLE PHASE CIRCUITS FED FROM THAT PHASE.
3. REFER TO TABLE 51C COLOUR CODE FOR CABLE CORES AND INSULATED CONDUCTORS OF AMENDMENT No. 2 ET101:2004/A2:2005 OF THE NATIONAL RULES FOR ELECTRICAL INSTALLATIONS.
4. EXTERNAL FACADE MOUNTED LIGHTING CIRCUITS, & CAR PARK LIGHTING CIRCUITS ARE TO BE CONTROLLED BY PHOTOCELL, TIME CLOCK AND KEY OPERATED HAND-OFF-AUTO SWITCHES. SEPARATE 24-7 TIMERS ARE REQUIRED FOR CAR PARK AND FACADE MOUNTED LIGHTING.
5. THE SECURITY SYSTEM SHALL BE LINKED TO THE FACADE MOUNTED LIGHTING. ACTIVATION OF INTRUDER ALARM SHALL SWITCH ON EXTERNAL LIGHTS ON BUILDING FACADE DURING HOURS OF DARKNESS.
6. PROVIDE FOR REQUIRED EARTH PITS TO SYSTEM.
7. INTRUDER ALARM PANEL LINKED TO FIRE ALARM PANEL FOR MONITORING PURPOSES.
8. EMERGENCY LIGHTING TEST UNIT TO BE INSTALLED ON ALL ELECTRICAL BOARDS AS INDICATED. SEE SPECIFICATION FOR FURTHER DETAILS.
9. SURGE PROTECTION TO BE INSTALLED, SEE SPECIFICATION FOR FURTHER DETAILS.
10. BUSBAR SYSTEM TO BE PROPRIETARY TYPE TESTED SYSTEM WITHIN ITS OWN COMPARTMENT WITH FRONT ACCESS.
11. ALL MCCB'S TO BE PLUG IN TYPE.
12. TRIP RATINGS, OVERLOAD AND SHORT TRIP SETTINGS TO BE CONFIRMED.
13. ALL CONTACTORS INSTALLED SHALL BE SUPPLIED C/W SUITABLY RATED OVERLOADS.
14. THE ELECTRICAL CONTRACTOR TO CHECK ALL QUANTITIES PRIOR TO ORDER OF DISTRIBUTION BOARDS.
15. INDICATOR LAMPS TO INDICATE MAINS HEALTHY, LOSS OF R PHASE, LOSS OF S PHASE & LOSS OF T PHASE. LAMPS TO BE MULTI-STACK LED.
16. ALLOW FOR MULTI-FUNCTION METER TO ALL SWITCHGEAR – RESPECTIVE SERVICES.
17. ALL METERS TO BE LINKED BACK TO BMS.
18. THE ELECTRICAL CONTRACTOR SHALL ALLOW FOR EQUIPOTENTIAL BONDING TO COMPLY WITH CURRENT ETCI REGULATIONS.
19. ALLOW 25% SPARE CAPACITY IN ALL LIGHTING, POWER & GENERAL SERVICES BOARDS.
20. ALL CIRCUITS SHALL BE PROTECTED BY AN RCBO.
21. ALL CABLING SHALL BE LSF TYPE.

ABBREVIATIONS:

RCBO	RESIDUAL-CURRENT CIRCUIT BREAKER WITH OVERCURRENT PROTECTION
MCCB	MOULDED CASE CIRCUIT BREAKER
SWA	STEEL WIRED ARMOURED
XLPE	CROSS-LINKED POLYETHYLENE
LSF	LOW SMOKE FLAME
CU	COPPER CONDUCTOR
TP	THREE PHASE
SP	SINGLE PHASE
TP&N	THREE PHASE & NEUTRAL
SP&N	SINGLE PHASE & NEUTRAL
PFC	POWER FACTOR CORRECTION
CT	CURRENT TRANSFORMER
HOA	HAND-OFF-AUTO SWITCH

LEGEND:

- SINGLE PHASE & NEUTRAL ISOLATOR – RATING AS INDICATED
- THREE PHASE & NEUTRAL ISOLATOR – RATING AS INDICATED
- SINGLE PHASE & NEUTRAL MOLDED CASE CIRCUIT BREAKER – RATING AS INDICATED
- THREE PHASE & NEUTRAL MOLDED CASE CIRCUIT BREAKER – RATING AS INDICATED
- CONNECTION TO EARTH
- EMERGENCY KNOCKOUT POINT – ELECTRICAL SUPPLY
- KEY OPERATED ELECTRICAL ISOLATOR
- KEY OPERATED ELECTRICAL ISOLATOR – CENTRAL DUST EXTRACT SYSTEM
- CLOCK DIGITAL TIMECLOCK
- MF MULTI-FUNCTION METER WITH MODBUS OUTPUT CARD – LINKED TO BMS

Revision	Description	Date	Drawn	Checked
A	Tender Issue	29-Jun-2026	KM	JG

GEANEY ENGINEERING CONSULTANTS
STUDIO 22,
WATERFORD BUSINESS PARK,
CORK ROAD,
WATERFORD,
IRELAND.
TEL: 051-879371
FAX: 051-853188
EMAIL: info@geaneyengineering.ie

project title:
Climate Action Summer Works Scheme
Construction Studies & Engineering Room
Refurbishment at
Rath Dara Community College,
Blanchardstown, Dublin 15, Co. Dublin

drawing title:
Proposed Electrical LV Schematic
Sheet 01 of 02

scale: NTS

architect: Dermot F Geoghegan Architects LTD

project number: 0839

drawing number: Volume A. 3.3 - EL106

A1

THE ELECTRICAL CONTRACTOR SHALL COORDINATE DIRECTLY WITH THE MAIN CONTRACTOR TO VERIFY WHETHER EACH INSTALLED MACHINE REQUIRES A SINGLE-PHASE OR THREE-PHASE SUPPLY. FOLLOWING THIS COORDINATION, THE ELECTRICAL CONTRACTOR SHALL PROVIDE AND INSTALL APPROPRIATELY RATED ISOLATORS TO SUIT EACH MACHINE.

EXISTING POWER DISTRIBUTION BOARD – TO BE DISCONNECTED AND REMOVED

ALLOW FOR DISCONNECTING & REMOVING ALL EXISTING GENERAL SERVICES & SMALL POWER SUB-CIRCUITS SERVING THE AREAS OF WORKS TOGETHER WITH ELECTRICAL CONTAINMENT & SUPPORTS.

THE ELECTRICAL CONTRACTOR SHALL VERIFY IF ANY EXISTING GENERAL SERVICES & SMALL POWER SUB-CIRCUITS SUPPLY OUTLETS & POWER POINTS IN AREAS OUTSIDE THE MAINS AREAS OF WORKS. ANY SUCH SUB-CIRCUITS SHALL BE RETAINED – MODIFY & EXTEND AS REQUIRED.

THE ELECTRICAL CONTRACTOR MUST TRACE END-TO-END, VERIFY USAGE & SUITABLY LABEL ALL EXISTING SUB-CIRCUIT CABLING WHICH EXTENDS FROM THE EXISTING POWER DISTRIBUTION BOARDS PRIOR TO COMMENCING DE-INSTALLATION WORKS/MODIFICATIONS.

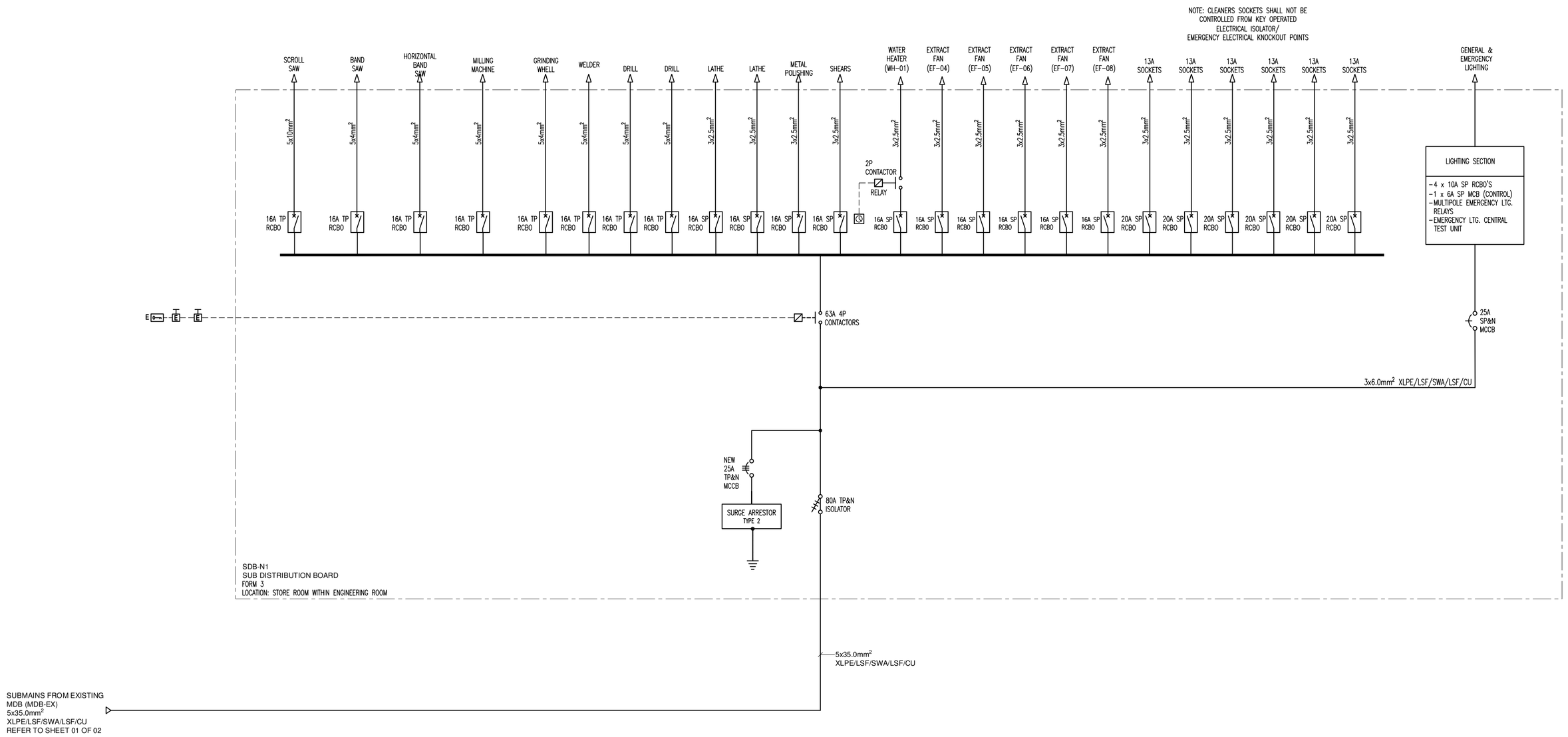

GENERAL NOTES

1) Do not scale services equipment from this drawing.
2) All dimensions should be checked on site.
3) Any drawing errors or divergences should be brought to the attention of Geaney Engineering Consultants at the address shown below.
4) Drawing to be read in conjunction with all other drawings and documentation.

NOTES:

1. ELECTRICAL INSTALLATION SHALL BE INSTALLED & CERTIFIED IN ACCORDANCE WITH I.S. 10101: 2020 NATIONAL RULES FOR ELECTRICAL INSTALLATIONS.
2. ANY SINGLE PHASE CIRCUIT FED DIRECTLY FROM A THREE PHASE DISTRIBUTION BOARD SHALL HAVE THE APPROPRIATE PHASE COLOUR EXTENDED INTO THE SINGLE PHASE CIRCUITS FED FROM THAT PHASE.
3. REFER TO TABLE 51C COLOUR CODE FOR CABLE CORES AND INSULATED CONDUCTORS OF AMENDMENT No. 2 ET101:2004/A2:2005 OF THE NATIONAL RULES FOR ELECTRICAL INSTALLATIONS.
4. EXTERNAL FACADE MOUNTED LIGHTING CIRCUITS, & CAR PARK LIGHTING CIRCUITS ARE TO BE CONTROLLED BY PHOTOCELL, TIME CLOCK AND KEY OPERATED HAND-OFF-AUTO SWITCHES. SEPARATE 24-7 TIMERS ARE REQUIRED FOR CAR PARK AND FACADE MOUNTED LIGHTING.
5. THE SECURITY SYSTEM SHALL BE LINKED TO THE FACADE MOUNTED LIGHTING. ACTIVATION OF INTRUDER ALARM SHALL SWITCH ON EXTERNAL LIGHTS ON BUILDING FACADE DURING HOURS OF DARKNESS.
6. PROVIDE FOR REQUIRED EARTH PITS TO SYSTEM.
7. INTRUDER ALARM PANEL LINKED TO FIRE ALARM PANEL FOR MONITORING PURPOSES.
8. EMERGENCY LIGHTING TEST UNIT TO BE INSTALLED ON ALL ELECTRICAL BOARDS AS INDICATED. SEE SPECIFICATION FOR FURTHER DETAILS.
9. SURGE PROTECTION TO BE INSTALLED, SEE SPECIFICATION FOR FURTHER DETAILS.
10. BUSBAR SYSTEM TO BE PROPRIETARY TYPE TESTED SYSTEM WITHIN ITS OWN COMPARTMENT WITH FRONT ACCESS.
11. ALL MCCB'S TO BE PLUG IN TYPE.
12. TRIP RATINGS, OVERLOAD AND SHORT TRIP SETTINGS TO BE CONFIRMED.
13. ALL CONTACTORS INSTALLED SHALL BE SUPPLIED C/W SUITABLY RATED OVERLOADS.
14. THE ELECTRICAL CONTRACTOR TO CHECK ALL QUANTITIES PRIOR TO ORDER OF DISTRIBUTION BOARDS.
15. INDICATOR LAMPS TO INDICATE MAINS HEALTHY, LOSS OF R PHASE, LOSS OF S PHASE & LOSS OF T PHASE. LAMPS TO BE MULTI-STACK LED.
16. ALLOW FOR MULTI-FUNCTION METER TO ALL SWITCHGEAR – RESPECTIVE SERVICES.
17. ALL METERS TO BE LINKED BACK TO BMS.
18. THE ELECTRICAL CONTRACTOR SHALL ALLOW FOR EQUIPOTENTIAL BONDING TO COMPLY WITH CURRENT ETCI REGULATIONS.
19. ALLOW 25% SPARE CAPACITY IN ALL LIGHTING, POWER & GENERAL SERVICES BOARDS.
20. ALL CIRCUITS SHALL BE PROTECTED BY AN RCBO.
21. ALL CABLING SHALL BE LSF TYPE.

ABBREVIATIONS:

RCBO	RESIDUAL-CURRENT CIRCUIT BREAKER WITH OVERCURRENT PROTECTION
MCCB	MOULDED CASE CIRCUIT BREAKER
SWA	STEEL WIRED ARMOURED
XLPE	CROSS-LINKED POLYETHYLENE
LSF	LOW SMOKE FLAME
CU	COPPER CONDUCTOR
TP	THREE PHASE
SP	SINGLE PHASE
TP&N	THREE PHASE & NEUTRAL
SP&N	SINGLE PHASE & NEUTRAL
PFC	POWER FACTOR CORRECTION
CT	CURRENT TRANSFORMER
HOA	HAND-OFF-AUTO SWITCH

LEGEND:

- SINGLE PHASE & NEUTRAL ISOLATOR – RATING AS INDICATED
- THREE PHASE & NEUTRAL ISOLATOR – RATING AS INDICATED
- SINGLE PHASE & NEUTRAL MOLDED CASE CIRCUIT BREAKER – RATING AS INDICATED
- THREE PHASE & NEUTRAL MOLDED CASE CIRCUIT BREAKER – RATING AS INDICATED
- CONNECTION TO EARTH
- EMERGENCY KNOCKOUT POINT – ELECTRICAL SUPPLY
- KEY OPERATED ELECTRICAL ISOLATOR
- KEY OPERATED ELECTRICAL ISOLATOR – CENTRAL DUST EXTRACT SYSTEM
- DIGITAL TIMECLOCK
- MULTI-FUNCTION METER WITH MODBUS OUTPUT CARD – LINKED TO BMS

Revision	Description	Date	Drawn	Checked
A	Tender Issue	29-Jun-2026	KM	JG

GEANEY ENGINEERING CONSULTANTS

STUDIO 22,
WATERFORD BUSINESS PARK,
CORK ROAD,
WATERFORD,
IRELAND.

TEL: 051-879371
FAX: 051-853188
EMAIL: info@geaneyengineering.ie

project title:

Climate Action Summer Works Scheme
Construction Studies & Engineering Room
Refurbishment at
Rath Dara Community College,
Blanchardstown, Dublin 15, Co. Dublin

drawing title:

Proposed Electrical LV Schematic
Sheet 02 of 02

scale: NTS

architect: Dermot F Geoghegan Architects LTD

project number: 0839

drawing number: Volume A. 3.3 - EL107

A1

DE-INSTALLATION NOTES (VENTILATION):

THE MECHANICAL CONTRACTOR SHALL ALLOW FOR DISCONNECTING & REMOVING OFF SITE ALL EXISTING OBSOLETE VENTILATION SERVICES WITHIN THE MAIN AREAS OF WORKS TOGETHER WITH ALL OBSOLETE FIXINGS & SUPPORTS.

THE MECHANICAL CONTRACTOR SHALL ALLOW FOR ALL NECESSARY MODIFICATIONS TO THE EXISTING VENTILATION SERVICES INFRASTRUCTURE AS REQUIRED TO FACILITATE THE PROPOSED WORKS.

THE FULL EXTENT OF THE EXISTING VENTILATION SERVICES INSTALLATIONS ARE NOT INDICATED ON THIS DRAWING. ALL EXISTING VENTILATION SERVICES INDICATED MUST BE VERIFIED BY THE MECHANICAL CONTRACTOR. IT SHALL BE THE MECHANICAL CONTRACTORS RESPONSIBILITY TO CARRY OUT A SURVEY TO TRACE AND IDENTIFY ALL EXISTING VENTILATION SERVICES IMPACTED BY THE PROPOSED WORKS.

ALL MODIFICATIONS TO THE EXISTING VENTILATION INFRASTRUCTURE SHALL BE REVIEWED WITH THE BUILDING SERVICES ENGINEER PRIOR TO COMMENCING WORKS.

EXISTING VENTILATION INFRASTRUCTURE IN THE AREAS OF WORKS WHICH IS TO BE RETAINED SHALL BE SUITABLY PROTECTED DURING WORKS.

THE CONTRACTOR IS STRONGLY RECOMMENDED TO VISIT SITE PRIOR TO TENDER TO SURVEY THE AREAS OF WORKS AND FAMILIARISE THEMSELVES WITH THE SCOPE OF WORK INVOLVED WITH THE ABOVE AND ALL OTHER WORKS INDICATED ON THIS DRAWING AND THE ACCOMPANYING DRAWINGS TO ENSURE THAT ALL DUE ALLOWANCES AND NECESSARY COSTS ARE ACCOUNTED FOR IN THEIR TENDER SUBMISSION - ADDITIONAL COSTS INCURRED DUE TO THIS EXERCISE NOT BEING CARRIED OUT WILL NOT BE ACCEPTED.

DE-INSTALLATION NOTES (DOMESTIC WATER):

THE MECHANICAL CONTRACTOR SHALL ALLOW FOR DISCONNECTING & REMOVING OFF SITE ALL EXISTING OBSOLETE DOMESTIC WATER SERVICES WITHIN THE MAIN AREAS OF WORKS TOGETHER WITH ALL OBSOLETE FIXINGS & SUPPORTS.

THE MECHANICAL CONTRACTOR SHALL ALLOW FOR ALL NECESSARY MODIFICATIONS TO THE EXISTING DOMESTIC WATER SERVICES INFRASTRUCTURE AS REQUIRED TO FACILITATE THE PROPOSED WORKS.

THE FULL EXTENT OF THE EXISTING DOMESTIC WATER SERVICES INSTALLATIONS ARE NOT INDICATED ON THIS DRAWING. ALL EXISTING DOMESTIC WATER SERVICES INDICATED MUST BE VERIFIED BY THE MECHANICAL CONTRACTOR. IT SHALL BE THE MECHANICAL CONTRACTORS RESPONSIBILITY TO CARRY OUT A SURVEY TO TRACE AND IDENTIFY ALL EXISTING DOMESTIC WATER SERVICES IMPACTED BY THE PROPOSED WORKS.

NOTE THAT SOME EXISTING DOMESTIC WATER SERVICES BRANCHES SERVING THE FIXTURES TO BE DISCONNECTED & REMOVED MAY BE SHARED WITH FIXTURES IN AREAS OUTSIDE THE MAIN AREAS OF WORKS - MODIFY & EXTEND EXISTING PIPEWORK AS REQUIRED TO MAINTAIN THE INTEGRITY OF THE DOMESTIC WATER SYSTEM OUTSIDE THE MAIN AREAS OF WORKS.

ALLOW FOR ISOLATING & DRAINING DOWN THE EXISTING DOMESTIC WATER SYSTEMS AS REQUIRED TO FACILITATE WORKS AND FOR REFILLING AS REQUIRED FOLLOWING COMPLETION OF WORKS.

ALL MODIFICATIONS TO THE EXISTING DOMESTIC WATER INFRASTRUCTURE SHALL BE REVIEWED WITH THE BUILDING SERVICES ENGINEER PRIOR TO COMMENCING WORKS.

EXISTING DOMESTIC WATER SERVICES INFRASTRUCTURE IN THE AREAS OF WORKS WHICH IS TO BE RETAINED SHALL BE SUITABLY PROTECTED DURING WORKS.

THE SCHOOL AUTHORITY SHALL BE MADE AWARE THAT DOMESTIC WATER SERVICES MAY BE OUT-OF-USE AT TIMES IN AREAS OF THE BUILDING/S OUTSIDE THE MAIN AREAS OF WORKS - THE MECHANICAL CONTRACTOR SHALL ALLOW FOR OUT-OF-HOURS WORKS TO AVOID IMPACTING SERVICES DURING SCHOOL/OFFICE HOURS.

THE CONTRACTOR IS STRONGLY RECOMMENDED TO VISIT SITE PRIOR TO TENDER TO SURVEY THE AREAS OF WORKS AND FAMILIARISE THEMSELVES WITH THE SCOPE OF WORK INVOLVED WITH THE ABOVE AND ALL OTHER WORKS INDICATED ON THIS DRAWING AND THE ACCOMPANYING DRAWINGS TO ENSURE THAT ALL DUE ALLOWANCES AND NECESSARY COSTS ARE ACCOUNTED FOR IN THEIR TENDER SUBMISSION - ADDITIONAL COSTS INCURRED DUE TO THIS EXERCISE NOT BEING CARRIED OUT WILL NOT BE ACCEPTED.

DE-INSTALLATION NOTES (HEATING SERVICES):

THE MECHANICAL CONTRACTOR SHALL ALLOW FOR DISCONNECTING & REMOVING OFF SITE ALL EXISTING OBSOLETE HEATING SERVICES WITHIN THE MAIN AREAS OF WORKS TOGETHER WITH ALL OBSOLETE FIXINGS & SUPPORTS.

THE MECHANICAL CONTRACTOR SHALL ALLOW FOR ALL NECESSARY MODIFICATIONS TO THE EXISTING HEATING SERVICES INFRASTRUCTURE AS REQUIRED TO FACILITATE THE PROPOSED WORKS.

THE FULL EXTENT OF THE EXISTING HEATING SERVICES INSTALLATIONS ARE NOT INDICATED ON THIS DRAWING. ALL EXISTING HEATING SERVICES INDICATED MUST BE VERIFIED BY THE MECHANICAL CONTRACTOR. IT SHALL BE THE MECHANICAL CONTRACTORS RESPONSIBILITY TO CARRY OUT A SURVEY TO TRACE AND IDENTIFY ALL EXISTING HEATING SERVICES IMPACTED BY THE PROPOSED WORKS.

THE EXISTING HEATING INFRASTRUCTURE IS A COMBINATION OF FLOW & RETURN AND SINGLE PIPE CIRCUITS WITH PIPEWORK INSTALLED AT HIGH LEVEL, IN CEILING VOIDS, AT LOW LEVEL AND UNDERFLOOR - ALL TO BE TRACED & VERIFIED BY THE MECHANICAL CONTRACTOR.

NOTE THAT EXISTING LTHW BRANCHES SERVING THE RADIATORS TO BE DISCONNECTED & REMOVED MAY BE SHARED WITH RADIATORS IN AREAS OUTSIDE THE MAIN AREAS OF WORKS - MODIFY & EXTEND EXISTING PIPEWORK AS REQUIRED TO MAINTAIN THE INTEGRITY OF THE HEATING SYSTEM OUTSIDE THE MAIN AREAS OF WORKS.

EXISTING OBSOLETE UNDERFLOOR PIPEWORK SHALL BE PURGED AND PIPEWORK DROPS TO UNDERFLOOR CUT FLUSH WITH THE FINISHED FLOOR LEVEL, PLUGGED AND FLOOR MADE GOOD.

ALLOW FOR DRAINING DOWN THE EXISTING HEATING SYSTEMS AS REQUIRED TO FACILITATE WORKS AND FOR REFILLING & BALANCING AS REQUIRED FOLLOWING COMPLETION OF WORKS.

ALL MODIFICATIONS TO THE EXISTING HEATING INFRASTRUCTURE SHALL BE REVIEWED WITH THE BUILDING SERVICES ENGINEER PRIOR TO COMMENCING WORKS.

EXISTING HEATING SERVICES INFRASTRUCTURE IN THE AREAS OF WORKS WHICH IS TO BE RETAINED SHALL BE SUITABLY PROTECTED DURING WORKS.

THE SCHOOL AUTHORITY SHALL BE MADE AWARE THAT HEATING SERVICES MAY BE OUT-OF-USE AT TIMES IN AREAS OF THE BUILDING/S OUTSIDE THE MAIN AREAS OF WORKS - THE MECHANICAL CONTRACTOR SHALL ALLOW FOR OUT-OF-HOURS WORKS TO AVOID IMPACTING SERVICES DURING SCHOOL/OFFICE HOURS.

THE CONTRACTOR IS STRONGLY RECOMMENDED TO VISIT SITE PRIOR TO TENDER TO SURVEY THE AREAS OF WORKS AND FAMILIARISE THEMSELVES WITH THE SCOPE OF WORK INVOLVED WITH THE ABOVE AND ALL OTHER WORKS INDICATED ON THIS DRAWING AND THE ACCOMPANYING DRAWINGS TO ENSURE THAT ALL DUE ALLOWANCES AND NECESSARY COSTS ARE ACCOUNTED FOR IN THEIR TENDER SUBMISSION - ADDITIONAL COSTS INCURRED DUE TO THIS EXERCISE NOT BEING CARRIED OUT WILL NOT BE ACCEPTED.

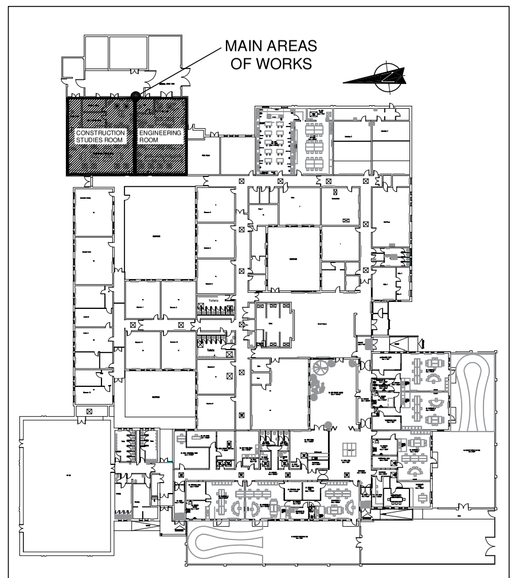

KEYPLAN - GROUND FLOOR (NTS)

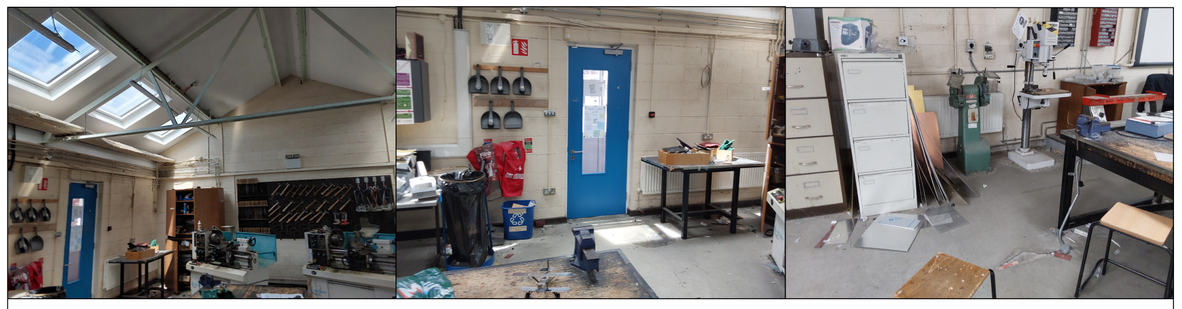

EXISTING MAIN F&R HEATING PIPES AT HIGH LEVEL CROSSING ENGINEERING ROOM

EXISTING CANOPY C/W EXTRACT FAN TO BLAZING HEARTH, FURNACE AND WELDER

EXISTING DUST EXTRACTION UNIT

EXISTING DUST EXTRACTION SERVICE IN CONSTRUCTION ROOM

EXISTING ELECTRIC WATER HEATER (WH-EX)

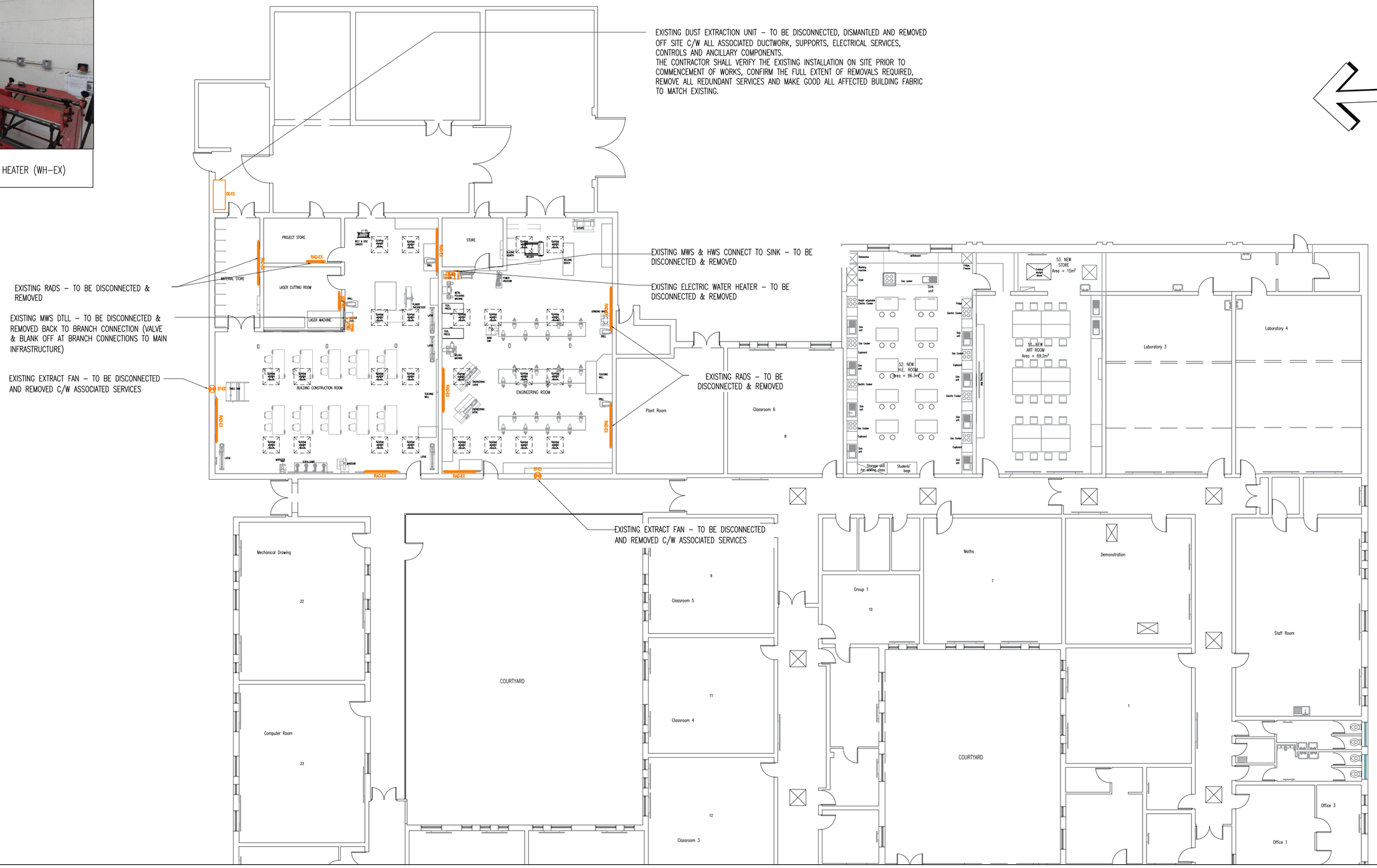

GENERAL NOTES

1) Do not scale services equipment from this drawing.
2) All dimensions should be checked on site.
3) Any drawing errors or divergences should be brought to the attention of Geaney Engineering Consultants at the address shown below.
4) Drawing to be read in conjunction with all other drawings and documentation.

NOTES:

1. THIS DRAWING SHALL BE READ IN CONJUNCTION WITH ALL MECHANICAL, ELECTRICAL, ARCHITECTURAL AND STRUCTURAL DRAWINGS & SPECIFICATIONS.
2. THE MECHANICAL CONTRACTOR SHALL CO-ORDINATE ALL SERVICES FULLY WITH ALL TRADES BEFORE COMMENCING WORK.
3. DO NOT SCALE THIS DRAWING. ALL DIMENSIONS SHALL BE TAKEN ON SITE.
4. THE MECHANICAL CONTRACTOR SHALL BE RESPONSIBLE FOR PROVIDING ALL NECESSARY INFORMATION TO ALLOW PROPER CO-ORDINATION OF ALL SERVICES.
5. EXTRA COSTS INCURRED DUE TO THE CO-ORDINATION EXERCISE NOT BEING COMPLETED WILL NOT BE ACCEPTED BY THE ENGINEER.
6. EXACT LOCATION OF ALL SERVICES SHALL BE AGREED WITH THE EMPLOYERS REPRESENTATIVE PRIOR TO COMMENCEMENT ON SITE.
7. ALL SERVICES AS SHOWN ON THIS DRAWING SHALL BE INCLUDED IN THE FINAL TENDER PRICE.
8. SAMPLE OF ALL EQUIPMENT SHALL BE APPROVED BY CLIENT, ARCHITECT AND BUILDING SERVICES ENGINEER PRIOR TO ORDERING.
9. ALL DIMENSIONS IN MILLIMETRES UNLESS STATED OTHERWISE.

LEGEND:

EXISTING PIPED SERVICE – TO BE DISCONNECTED & REMOVED

EXISTING WATER SERVICES FIXTURE OUTLET/CONNECTION

WH-EX — EXISTING ELECTRIC WATER HEATER

EXISTING PIPED SERVICE – RETAINED/MODIFIED

EXISTING PIPED SERVICE – TO BE DISCONNECTED & REMOVED

RAD-EX — EXISTING RADIATOR

Revision	Description	Date	Drawn	Checked
A	Tender Issue	29-Jun-2026	KM	JG

GEANEY ENGINEERING CONSULTANTS

STUDIO 22,
WATERFORD BUSINESS PARK,
CORK ROAD,
WATERFORD,
IRELAND.

TEL: 051-879371
FAX: 051-853188
EMAIL: info@geaneyengineering.ie

project title:
Climate Action Summer Works Scheme
Construction Studies & Engineering Room
Refurbishment at
Rath Dara Community College,
Blanchardstown, Dublin 15, Co. Dublin

drawing title:
Existing Mechanical Services Layout

scale: 1:150 @A1

architect: Dermot F Geoghegan Architects LTD

project number: 0839

drawing number: Volume A. 3.3 - M1

A1

Radiator Schedule

Radiator Reference	Required Radiator Output	Required Radiator Output	Radiator Dims			Recessed Radiator	Required Wall Recess	Specification	Control
			Height (mm)	Length (mm)	Depth (mm)				
RAD-01		2.560	505	2000	78				
RAD-02		2.560	505	2000	78				
RAD-03	12.50	2.560	505	2000	78	No	-	Merriott Precision H21 or Equivalent	Room Stat Controlled
RAD-04		2.560	505	2000	78				
RAD-05		2.560	505	2000	78				
RAD-06	0.95	1.024	505	800	78	No	-	Merriott Precision H21 or Equivalent	Room Stat Controlled
RAD-07		2.560	505	2000	78				
RAD-08		2.560	505	2000	78				
RAD-09	12.50	2.560	505	2000	78	No	-	Merriott Precision H21 or Equivalent	Room Stat Controlled
RAD-10		2.560	505	2000	78				
RAD-11		2.560	505	2000	78				
RAD-12	1.40	1.408	505	1100	78	No	-	Merriott Precision H21 or Equivalent	Room Stat Controlled
RAD-13	1.60	1.664	505	1300	78	No	-	Merriott Precision H21 or Equivalent	Room Stat Controlled
RAD-14	1.60	1.664	505	1300	78	No	-	Merriott Precision H21 or Equivalent	Room Stat Controlled

ALL SERVICE PENETRATIONS THROUGH FIRE-RATED ELEMENTS, INCLUDING WALLS, FLOORS, CEILINGS, AND SHAFTS, SHALL BE SEALED WITH FIRE RETARDING SEALANT TO MAINTAIN THE REQUIRED FIRE RESISTANCE PERIOD OF THE ELEMENT PENETRATED.

FIRE STOPPING SYSTEMS SHALL BE TESTED AND CERTIFIED IN ACCORDANCE WITH RELEVANT REGULATIONS AS IS EN 1366 & IS EN 13501

FIRE STOPPING SHALL BE INSTALLED IN ACCORDANCE WITH MANUFACTURER'S TESTED DETAILS AND BY COMPETENT SPECIALIST

COORDINATION WITH THE FIRE STRATEGY AND ARCHITECTURAL DRAWINGS IS REQUIRED PRIOR TO INSTALLATION

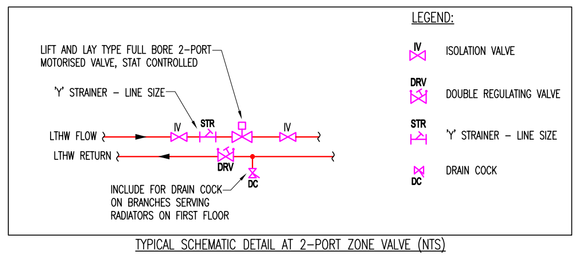

TYPICAL SCHEMATIC DETAIL AT 2-PORT ZONE VALVE (NTS)

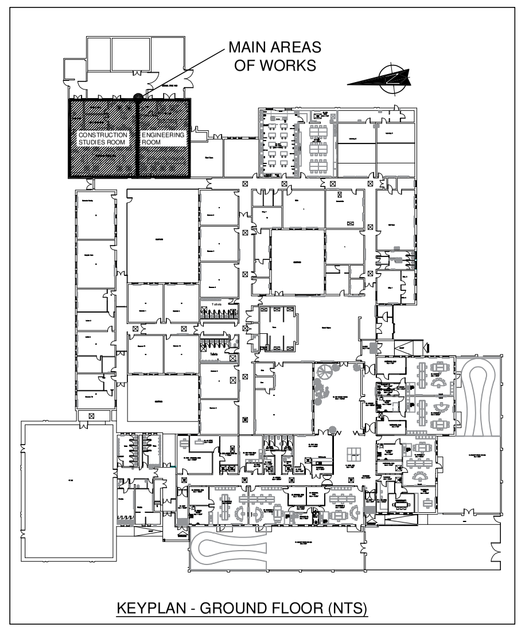

KEYPLAN - GROUND FLOOR (NTS)

ALL SERVICE PENETRATIONS THROUGH FIRE-RATED ELEMENTS, INCLUDING WALLS, FLOORS, CEILINGS, AND SHAFTS, SHALL BE SEALED WITH FIRE RETARDING SEALANT TO MAINTAIN THE REQUIRED FIRE RESISTANCE PERIOD OF THE ELEMENT PENETRATED.

FIRE STOPPING SYSTEMS SHALL BE TESTED AND CERTIFIED IN ACCORDANCE WITH RELEVANT REGULATIONS AS IS EN 1366 & IS EN 13501

FIRE STOPPING SHALL BE INSTALLED IN ACCORDANCE WITH MANUFACTURER'S TESTED DETAILS AND BY COMPETENT SPECIALIST

COORDINATION WITH THE FIRE STRATEGY AND ARCHITECTURAL DRAWINGS IS REQUIRED PRIOR TO INSTALLATION

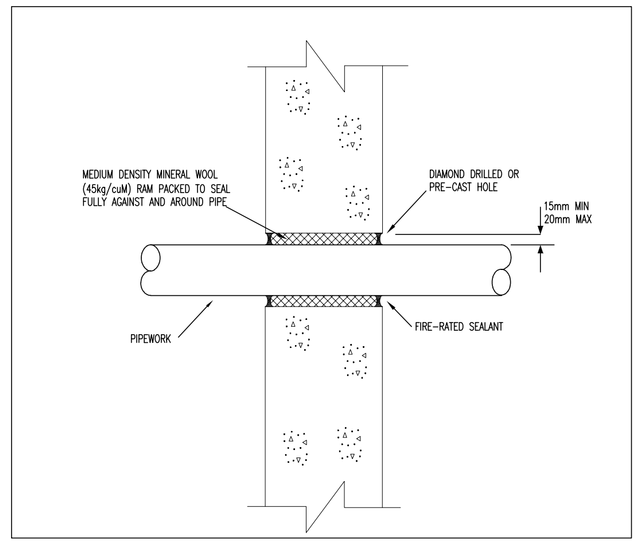

TYPICAL FIRE STOPPING AROUND PIPEWORK THROUGH WALL DETAIL (N.T.S.)

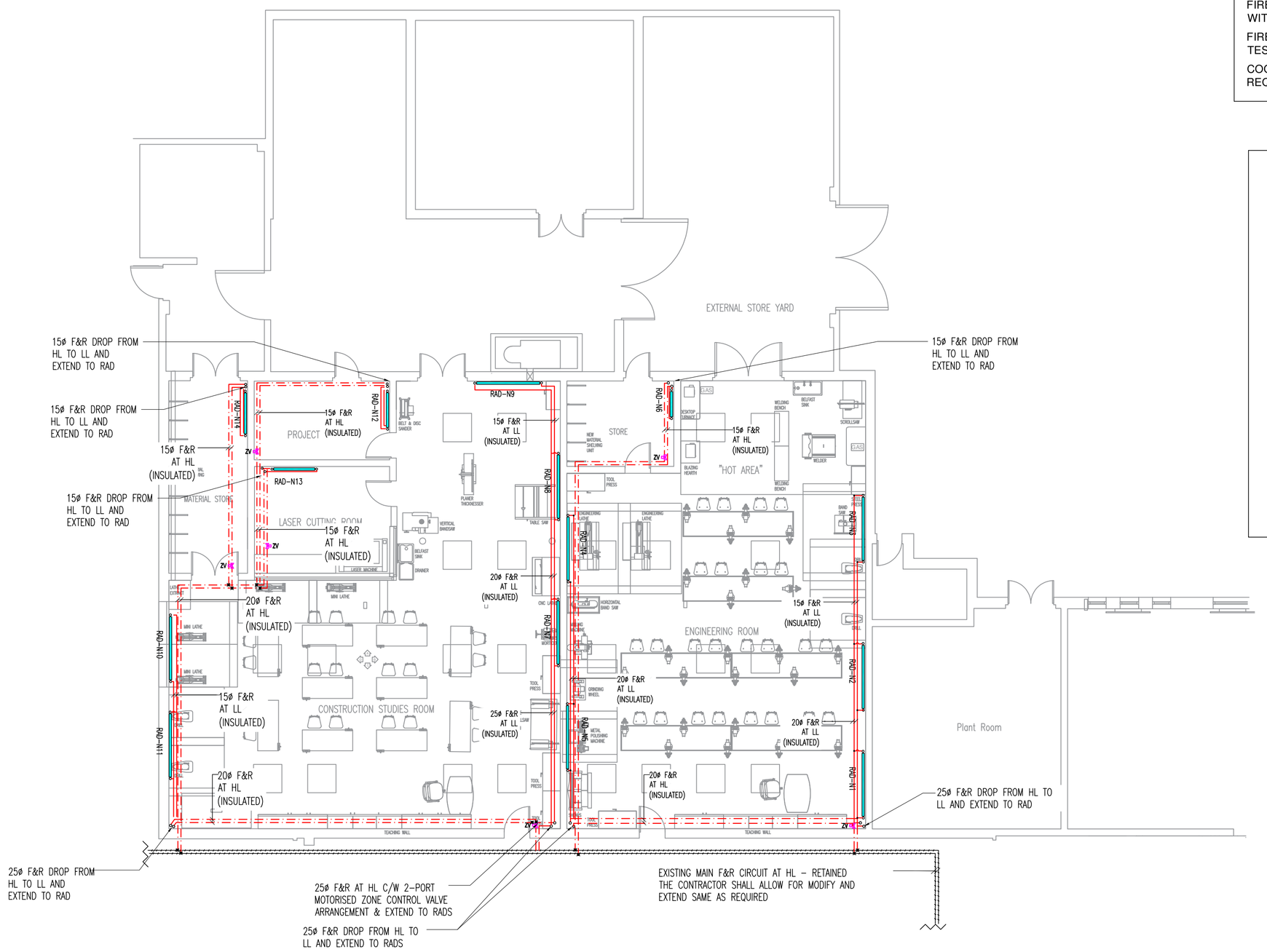

GENERAL NOTES

1) Do not scale services equipment from this drawing.
2) All dimensions should be checked on site.
3) Any drawing errors or divergences should be brought to the attention of Geaney Engineering Consultants at the address shown below.
4) Drawing to be read in conjunction with all other drawings and documentation.

NOTES:

1. THIS DRAWING SHALL BE READ IN CONJUNCTION WITH ALL MECHANICAL, ELECTRICAL, ARCHITECTURAL AND STRUCTURAL DRAWINGS & SPECIFICATIONS.
2. THE MECHANICAL CONTRACTOR SHALL CO-ORDINATE ALL SERVICES FULLY WITH ALL TRADES BEFORE COMMENCING WORK.
3. DO NOT SCALE THIS DRAWING. ALL DIMENSIONS SHALL BE TAKEN ON SITE.
4. THE MECHANICAL CONTRACTOR SHALL BE RESPONSIBLE FOR PROVIDING ALL NECESSARY INFORMATION TO ALLOW PROPER CO-ORDINATION OF ALL SERVICES.
5. EXTRA COSTS INCURRED DUE TO THE CO-ORDINATION EXERCISE NOT BEING COMPLETED WILL NOT BE ACCEPTED BY THE ENGINEER.
6. EXACT LOCATION OF ALL SERVICES SHALL BE AGREED WITH THE EMPLOYERS REPRESENTATIVE PRIOR TO COMMENCEMENT ON SITE.
7. ALL SERVICES AS SHOWN ON THIS DRAWING SHALL BE INCLUDED IN THE FINAL TENDER PRICE.
8. SAMPLE OF ALL EQUIPMENT SHALL BE APPROVED BY CLIENT, ARCHITECT AND BUILDING SERVICES ENGINEER PRIOR TO ORDERING.
9. ALL DIMENSIONS IN MILLIMETRES UNLESS STATED OTHERWISE.

HEATING SERVICES NOTES:

1. ALL PIPED SERVICES, PLANT, EQUIPMENT, VALVES ETC. SHOWN ON THIS DRAWING ARE PART OF THE NEW INSTALLATION UNLESS INDICATED OTHERWISE.
2. ALL EQUIPMENT TO HAVE LOCAL ISOLATING VALVES.
3. THE MECHANICAL CONTRACTOR SHALL ENSURE THAT ALL RADIATORS ARE MEASURED IN RELEVANT LOCATIONS PRIOR TO ORDERING.
4. FINAL LOCATIONS OF ALL RADIATORS TO BE CO-ORDINATED ON SITE WITH FIXED FURNITURE LAYOUTS.
5. ALL PERIMETER RADIATORS SHALL BE CENTRED UNDERNEATH WINDOWS WHERE POSSIBLE.
6. THE MECHANICAL CONTRACTOR SHALL BE RESPONSIBLE TO IDENTIFY SUITABLE FINAL ROUTES FOR PIPEWORK.
7. ALL PIPEWORK UNDERFLOOR, IN ATTIC SPACES, IN CEILING VOIDS AND SERVICES RISERS SHALL BE INSULATED AS SPECIFIED IN THE TENDER DOCUMENTS.
8. THERMAL BLANKETS SHALL BE SUPPLIED & INSTALLED TO ALL VALVES IN THE PLANT ROOMS. ALL SHALL BE APPLIED STRICTLY IN ACCORDANCE WITH MANUFACTURER'S REQUIREMENTS.
9. PIPEWORK RUN AT HIGH LEVEL/IN CEILING VOID/IN ATTIC SPACE SHALL GENERALLY BE MOUNTED IN M10 PIPEWORK CLIPS C/W INSULATION INSERTS OR M11 BRACKETS C/W INSULATION INSERTS MOUNTED ON GALVANISED STEEL SUPPORTS. ALL SUPPORTS SHALL BE ANCHORED TO THE STRUCTURE. LIASE WITH STRUCTURAL ENGINEER PRIOR TO COMMENCING WORKS.
10. ALLOW FOR KEY VENT PIPES AT HIGH POINTS ON F&R PIPEWORK EXTENDED TO BELOW CEILING LEVEL.
11. ALLOW FOR DRAIN COCKS AT END OF ALL LOW LEVEL PIPEWORK BRANCHES.
12. ALL LTHW PIPEWORK TO BE MEDIUM GRADE STEEL UNLESS INDICATED OTHERWISE.
13. ALL ZONE VALVES SHALL BE FULL BORE LINE SIZE.
14. NOT ALL LOW LEVEL PIPEWORK SHOWN FOR CLARITY - THE MECHANICAL CONTRACTOR SHALL INCLUDE FOR ALL LOW LEVEL PIPEWORK AS REQUIRED TO SERVE RADIATORS.
15. THE MECHANICAL CONTRACTOR SHALL ALLOW FOR SUPPLYING AND INSTALLING ANCHOR POINTS ON LTHW F&R PIPEWORK AT MIDWAY OVER EACH CONTINUOUS LENGTH OF PIPE AS REQUIRED.
16. THE MECHANICAL CONTRACTOR SHALL ALLOW FOR OFFSETS IN PIPEWORK AS REQUIRED FOR COORDINATION WITH SERVICE OPENINGS, STRUCTURAL ELEMENTS AND OTHER SERVICES.
17. ALL PIPED SERVICES PENETRATIONS THROUGH WALLS AND FIRE COMPARTMENTS SHALL BE SLEEVED. SLEEVES SHALL BE IN ONE LENGTH AND SHALL BE FIXED SQUARE AND FLUSH WITH THE SURFACE OF THE FINISHED WALL/COMPARTMENT. THE SLEEVES SHALL BE BUILT INTO THE WALL/COMPARTMENT AND SUITABLY FIRE SEALED.
18. ALL LTHW PIPEWORK IN THE FLOOR INSULATION ZONE SHALL BE PRE-INSULATED PEX-AL-PEX IN CONTINUOUS LENGTHS - NO JOINTS. MAINTAIN MINIMUM SEPARATION OF 300mm BETWEEN LTHW PIPEWORK AND DOMESTIC WATER SERVICES PIPEWORK IN THE FLOOR INSULATION ZONE.
19. SURFACE MOUNTED PIPEWORK DROPS ARE NOT PERMITTED IN CORRIDORS/CIRCULATION AREAS.
20. THE MECHANICAL CONTRACTOR SHALL ALLOW FOR DRAINING DOWN THE EXISTING HEATING SYSTEM AS REQUIRED TO FACILITATE WORKS AND FOR RE-FILLING & BALANCING THE ENTIRE SYSTEM AS REQUIRED FOLLOWING COMPLETION OF WORKS.
21. FINAL LOCATION OF ALL CONNECTIONS TO EXISTING SYSTEMS TO BE AGREED ON SITE PRIOR TO COMMENCEMENT OF WORK. MODIFICATIONS TO EXISTING SYSTEMS TO BE AGREED WITH THE BUILDING SERVICES ENGINEER PRIOR TO COMMENCING WORKS.

HEATING SERVICES LEGEND:

- RAD-_ — RADIATOR (REFER TO SCHEDULE)
- PIPED SERVICE AT LOW LEVEL
- PIPED SERVICE AT HIGH LEVEL
- EXISTING PIPED SERVICE - RETAINED/MODIFIED
- ZV — 2-PORT MOTORISED ZONE CONTROL VALVE, STAT CONTROLLED

Revision	Description	Date	Drawn	Checked
A	Tender Issue	29-Jun-2026	KM	JG

GEANEY ENGINEERING CONSULTANTS

STUDIO 22,
WATERFORD BUSINESS PARK,
CORK ROAD,
WATERFORD,
IRELAND.

TEL: 051-879371
FAX: 051-853188
EMAIL: info@geaneyengineering.ie

project title:
Climate Action Summer Works Scheme
Construction Studies & Engineering Room
Refurbishment at
Rath Dara Community College,
Blanchardstown, Dublin 15, Co. Dublin

drawing title:
Proposed Heating Services Layout

scale: 1:100 @A1

architect: Dermot F Geoghegan Architects LTD

project number: 0839

drawing number: Volume A. 3.3 - M101

A1

SCHEMATIC LEGEND:

IV	ISOLATION VALVE
IV	ISOLATION VALVE – 1/4 TURN STOP COCK
DCV	DOUBLE CHECK VALVE
TMV-A	TMV3 APPROVED THERMOSTATIC MIXING VALVE C/W INTEGRAL CHECK VALVES AND STRAINERS – HORNE H15 RANGE OR EQUIVALENT
TMV-B	TMV3 APPROVED THERMOSTATIC MIXING VALVE C/W INTEGRAL CHECK VALVES AND STRAINERS – HORNE H20 RANGE OR EQUIVALENT
SV	SAFETY VALVE – PADLOCK TYPE, SIZE AS INDICATED
DC	DRAIN COCK
PRV	PRESSURE REDUCING VALVE C/W GAUGE (PEGLER OR EQUIVALENT)

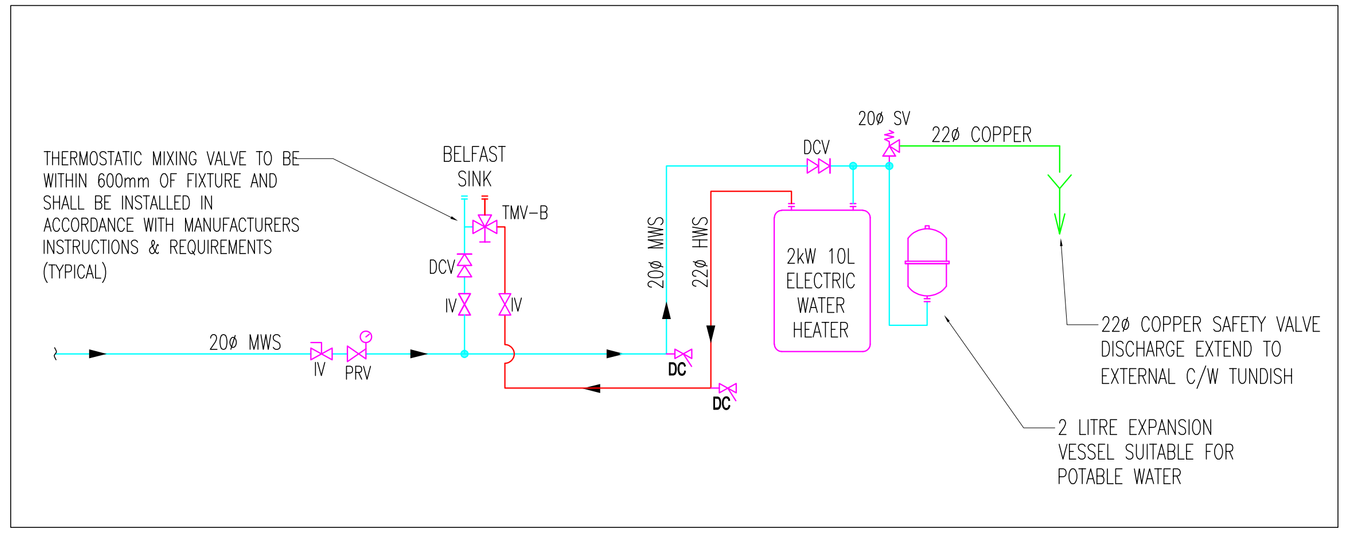

DOMESTIC WATER SERVICES SCHEMATIC AT SINK IN RECONFIGURED CONSTRUCTION ROOM AND ENGINEERING ROOM (NTS)

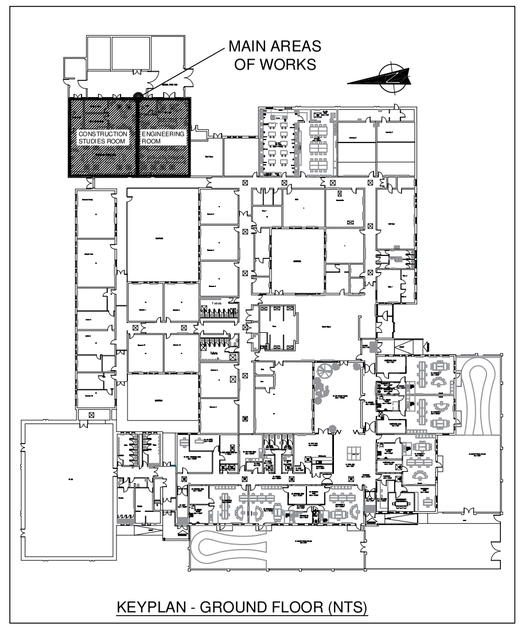

KEYPLAN - GROUND FLOOR (NTS)

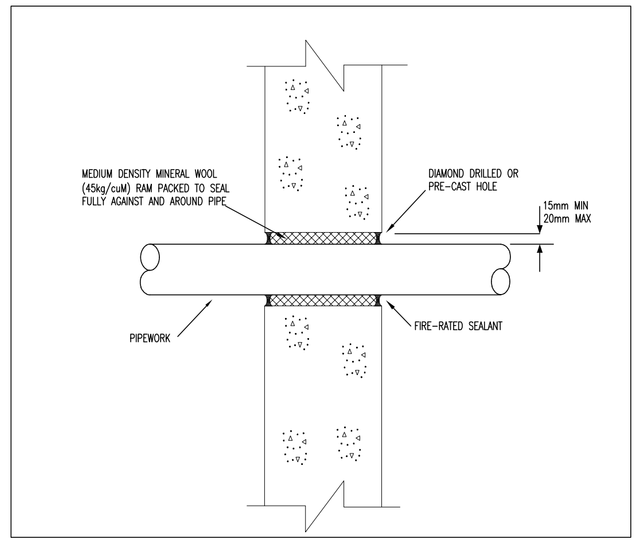

TYPICAL FIRE STOPPING AROUND PIPEWORK THROUGH WALL DETAIL (N.T.S.)

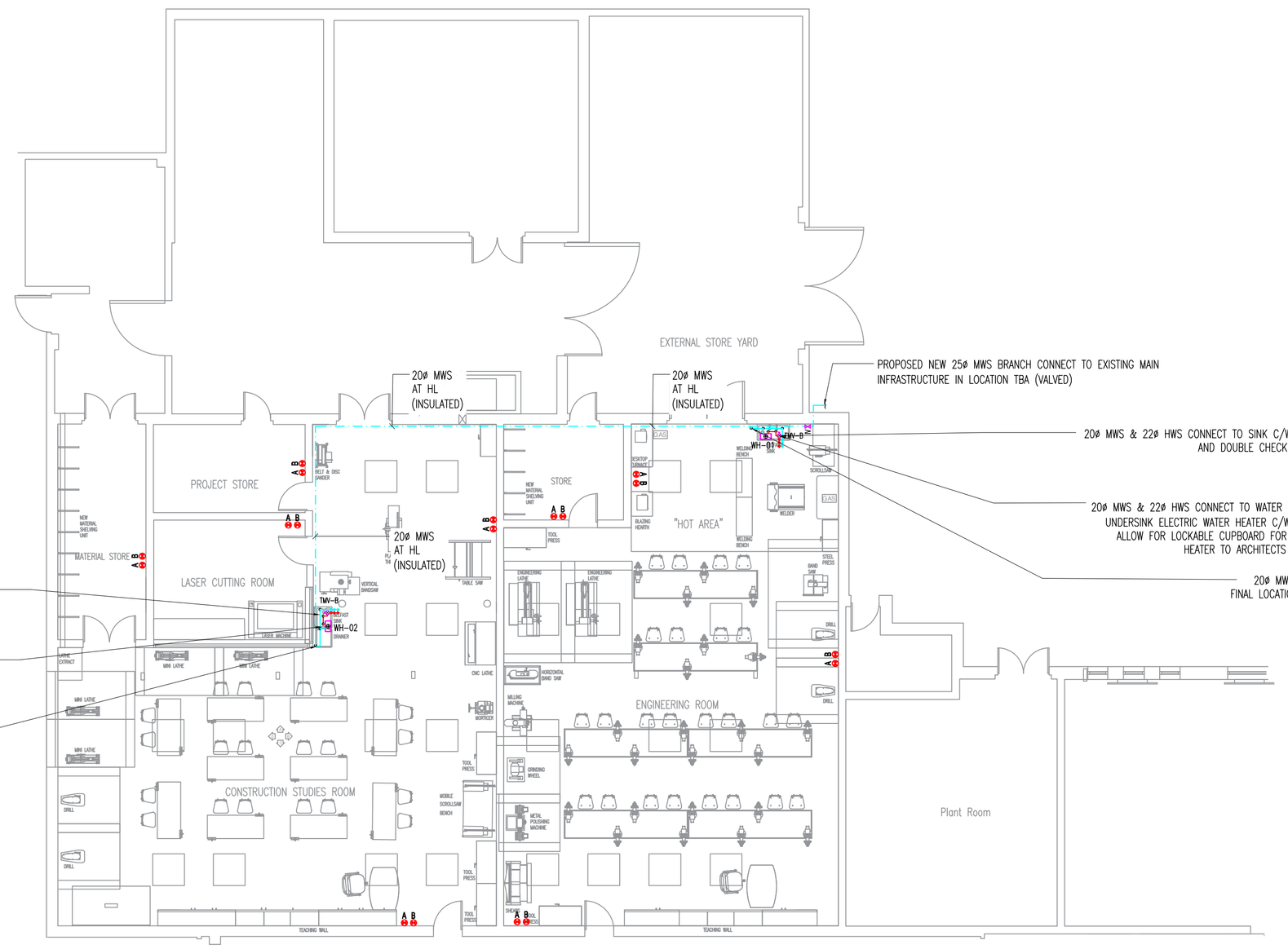

ALL SERVICE PENETRATIONS THROUGH FIRE-RATED ELEMENTS, INCLUDING WALLS, FLOORS, CEILINGS, AND SHAFTS, SHALL BE SEALED WITH FIRE RETARDING SEALANT TO MAINTAIN THE REQUIRED FIRE RESISTANCE PERIOD OF THE ELEMENT PENETRATED.

FIRE STOPPING SYSTEMS SHALL BE TESTED AND CERTIFIED IN ACCORDANCE WITH RELEVANT REGULATIONS AS IS EN 1366 & IS EN 13501

FIRE STOPPING SHALL BE INSTALLED IN ACCORDANCE WITH MANUFACTURER'S TESTED DETAILS AND BY COMPETENT SPECIALIST

COORDINATION WITH THE FIRE STRATEGY AND ARCHITECTURAL DRAWINGS IS REQUIRED PRIOR TO INSTALLATION

GENERAL NOTES

1) Do not scale services equipment from this drawing.
2) All dimensions should be checked on site.
3) Any drawing errors or divergences should be brought to the attention of Geaney Engineering Consultants at the address shown below.
4) Drawing to be read in conjunction with all other drawings and documentation.

NOTES:

1. THIS DRAWING SHALL BE READ IN CONJUNCTION WITH ALL MECHANICAL, ELECTRICAL, ARCHITECTURAL AND STRUCTURAL DRAWINGS & SPECIFICATIONS.
2. THE MECHANICAL CONTRACTOR SHALL CO-ORDINATE ALL SERVICES FULLY WITH ALL TRADES BEFORE COMMENCING WORK.
3. DO NOT SCALE THIS DRAWING. ALL DIMENSIONS SHALL BE TAKEN ON SITE.
4. THE MECHANICAL CONTRACTOR SHALL BE RESPONSIBLE FOR PROVIDING ALL NECESSARY INFORMATION TO ALLOW PROPER CO-ORDINATION OF ALL SERVICES.
5. EXTRA COSTS INCURRED DUE TO THE CO-ORDINATION EXERCISE NOT BEING COMPLETED WILL NOT BE ACCEPTED BY THE ENGINEER.
6. EXACT LOCATION OF ALL SERVICES SHALL BE AGREED WITH THE EMPLOYERS REPRESENTATIVE PRIOR TO COMMENCEMENT ON SITE.
7. ALL SERVICES AS SHOWN ON THIS DRAWING SHALL BE INCLUDED IN THE FINAL TENDER PRICE.
8. SAMPLE OF ALL EQUIPMENT SHALL BE APPROVED BY CLIENT, ARCHITECT AND BUILDING SERVICES ENGINEER PRIOR TO ORDERING.
9. ALL DIMENSIONS IN MILLIMETRES UNLESS STATED OTHERWISE.

DOMESTIC WATER SERVICES NOTES:

1. DOMESTIC WATER SERVICES PIPEWORK SHALL BE COPPER EXCLUDING PIPEWORK IN FLOOR AND MAINS WATERS PIPEWORK.
2. MAINS WATER PIPEWORK SHALL BE NON-METALLIC PIPEWORK – PLASTIC BARRIER PIPEWORK, MULTILAYER COMPOSITE PIPE SUITABLE FOR POTABLE WATER.
3. PROVIDE BALLOFIX VALVES ON ALL FINAL CONNECTIONS TO FIXTURES.
4. ALL EXPOSED PIPEWORK TO FIXTURES SHALL BE CHROME PLATED.
5. ALLOW FOR DRAIN COCKS AT END OF ALL LOW LEVEL PIPEWORK BRANCHES.
6. THE MECHANICAL CONTRACTOR SHALL BE RESPONSIBLE TO IDENTIFY SUITABLE FINAL ROUTES FOR PIPEWORK.
7. ALL PIPEWORK IN PLANT ROOMS, ATTIC SPACES, CEILING VOIDS AND SERVICES RISERS SHALL BE INSULATED AS SPECIFIED IN THE TENDER DOCUMENTS.
8. PIPEWORK RUN AT HIGH LEVEL/IN CEILING VOIDS SHALL GENERALLY BE MOUNTED IN M10 PIPEWORK CLIPS C/W INSULATION INSERTS FLAMCO OR EQUIVALENT) OR M11 BRACKETS C/W INSULATION INSERTS MOUNTED ON GALVANISED STEEL SUPPORTS. ALL SUPPORTS SHALL BE SECURED TO THE STRUCTURE. LIAISE WITH STRUCTURAL ENGINEER PRIOR TO COMMENCING WORKS.
9. COLD & HOT WATER SERVICE PIPES IN THE FLOOR INSULATION ZONE SHALL BE PRE-INSULATED PEX-AL-PEX SUITABLE FOR POTABLE WATER IN CONTINUOUS LENGTHS – NO JOINTS.
10. MAINTAIN MINIMUM SEPARATION OF 300mm BETWEEN HEATING PIPEWORK AND DOMESTIC WATER SERVICES PIPEWORK IN THE FLOOR.
11. SURFACE MOUNTED PIPEWORK DROPS ARE NOT PERMITTED IN CORRIDORS/CIRCULATION AREAS.
12. CONNECT HWSF TO HWSF WITHIN 0.6 METRES OF OUTLETS.
13. ALL SANITARY WARE & TMV'S SHALL BE TMV3 DOB COMPLIANT.
14. MIXED HOT WATER SERVICES FROM TMV'S TO BE SET AT 43°C MAXIMUM
15. TMV'S SHALL BE INSTALLED IN ACCORDANCE WITH MANUFACTURER'S INSTRUCTIONS & REQUIREMENTS.
16. THE MECHANICAL CONTRACTOR SHALL ALLOW FOR OFFSETS IN PIPEWORK AS REQUIRED FOR COORDINATION WITH SERVICE OPENINGS, STRUCTURAL ELEMENTS AND OTHER SERVICES.
17. ALL PIPED SERVICES PENETRATIONS THROUGH WALLS AND FIRE COMPARTMENTS SHALL BE SLEEVED. SLEEVES SHALL BE IN ONE LENGTH AND SHALL BE FIXED SQUARE AND FLUSH WITH THE SURFACE OF THE FINISHED WALL/COMPARTMENT. THE SLEEVES SHALL BE BUILT INTO THE WALL/COMPARTMENT AND SUITABLY FIRE SEALED.
18. FINAL LOCATIONS OF MAINS WATER DRINKING POINTS TO BE AGREED.
19. THE MECHANICAL CONTRACTOR SHALL ALLOW FOR DRAINING DOWN THE EXISTING DOMESTIC WATER SERVICES SYSTEM AS REQUIRED TO FACILITATE WORKS AND FOR REFILLING AS REQUIRED FOLLOWING COMPLETION OF WORKS.
20. FINAL LOCATION OF ALL CONNECTIONS TO EXISTING SYSTEMS TO BE AGREED ON SITE PRIOR TO COMMENCEMENT OF WORK. MODIFICATIONS TO EXISTING SYSTEMS TO BE AGREED WITH THE BUILDING SERVICES ENGINEER PRIOR TO COMMENCING WORKS.

DOMESTIC WATER SERVICES LEGEND:

	WATER SERVICES FIXTURE OUTLET/CONNECTION
TMV-B	THERMOSTATIC MIXING VALVE – HORNE H20 RANGE OR EQUIVALENT
WH-	2.0kW ELECTRIC WATER HEATER – REFER TO SCHEDULE
	PIPED SERVICE AT LOW LEVEL
	PIPED SERVICE AT HIGH LEVEL

FIRE FIGHTING NOTES:

1. FIRE EXTINGUISHER INSTALLATION SHALL BE IN ACCORDANCE WITH I.S. 291:2015 "SELECTION, COMMISSIONING, INSTALLATION, INSPECTION AND MAINTENANCE OF PORTABLE FIRE EXTINGUISHERS".
2. ALL ELECTRICAL DISTRIBUTION BOARDS SHALL HAVE A CARBON DIOXIDE FIRE EXTINGUISHER LOCATED ADJACENT TO THEM.
3. EXTINGUISHERS MUST NOT BE PLACED OVER, OR ADJACENT TO RADIATORS OR HEAT EMITTING APPLIANCES.
4. EXTINGUISHERS MUST NOT BE LOCATED WHERE THEY MAY BE EXPOSED TO CORROSIVE ATMOSPHERES OR TO SPLASHING BY CORROSIVE FLUIDS.
5. ALL FIRE POINTS SHALL HAVE SUITABLE SIGNACE WHICH MARK LOCATIONS IN ACCORDANCE WITH I.S. 291 2015 AND THE SAFETY, HEALTH AND WELFARE AT WORK ACT (1995) REGULATIONS. PARTICULAR ATTENTION SHOULD BE PAID TO FIRE POINTS NOT IN DIRECT VIEW.
6. EXTINGUISHER I.D TAGS SHALL BE DISPLAYED ABOVE EACH EXTINGUISHER WHICH EXPLAINS USES AND HAZARDS IN ACCORDANCE WITH I.S. 291 2015.

FIRE FIGHTING LEGEND:

A	PORTABLE FIRE EXTINGUISHER – AFFF FOAM (6 LITRE CAPACITY)
B	PORTABLE FIRE EXTINGUISHER – CARBON DIOXIDE (2KG CAPACITY)

Revision	Description	Date	Drawn	Checked
A	Tender Issue	29-Jun-2026	KM	JG

GEANEY ENGINEERING CONSULTANTS
STUDIO 22,
WATERFORD BUSINESS PARK,
CORK ROAD,
WATERFORD,
IRELAND.
TEL: 051-879371
FAX: 051-853188
EMAIL: info@geaneyengineering.ie

project title:
Climate Action Summer Works Scheme
Construction Studies & Engineering Room
Refurbishment at
Rath Dara Community College,
Blanchardstown, Dublin 15, Co. Dublin

drawing title:
Proposed Domestic Water Services Layout

scale: 1:100 @A1

architect: Dermot F Geoghegan Architects LTD

project number: 0839

drawing number: Volume A. 3.3 - M102

A1

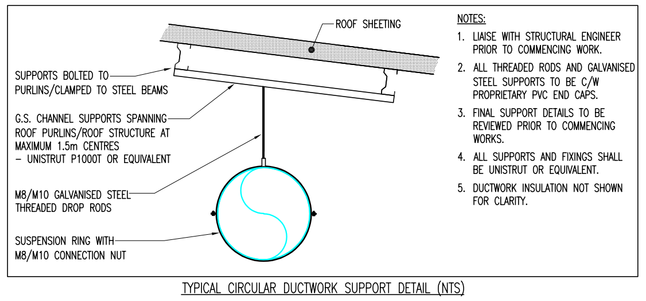

NOTES:
1. LIAISE WITH STRUCTURAL ENGINEER PRIOR TO COMMENCING WORK.
2. ALL THREADED RODS AND GALVANISED STEEL SUPPORTS TO BE C/W PROPRIETARY PVC END CAPS.
3. FINAL SUPPORT DETAILS TO BE REVIEWED PRIOR TO COMMENCING WORKS.
4. ALL SUPPORTS AND FIXINGS SHALL BE UNISTRUT OR EQUIVALENT.
5. DUCTWORK INSULATION NOT SHOWN FOR CLARITY.

TYPICAL CIRCULAR DUCTWORK SUPPORT DETAIL (NTS)

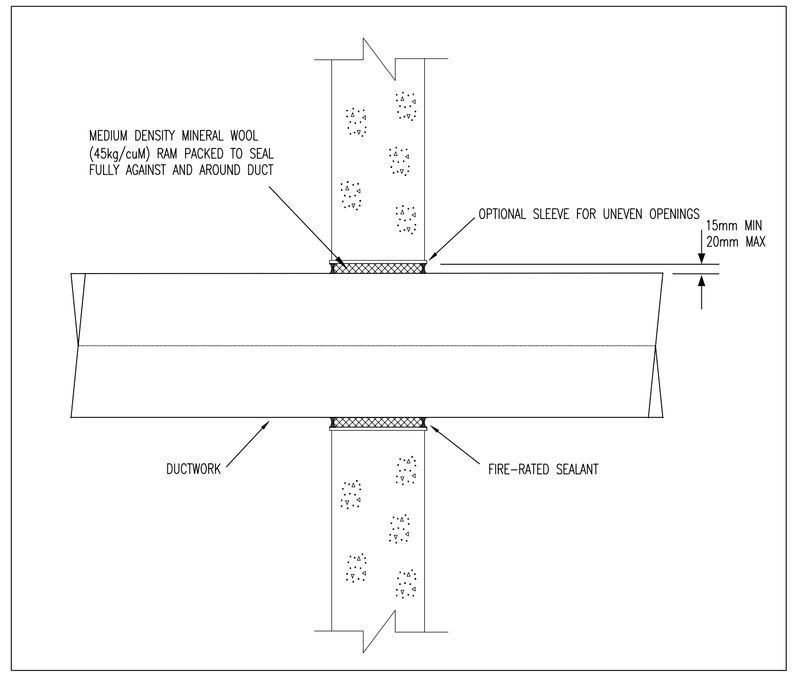

TYPICAL FIRE STOPPING AROUND DUCTWORK THROUGH WALL DETAIL (N.T.S.)

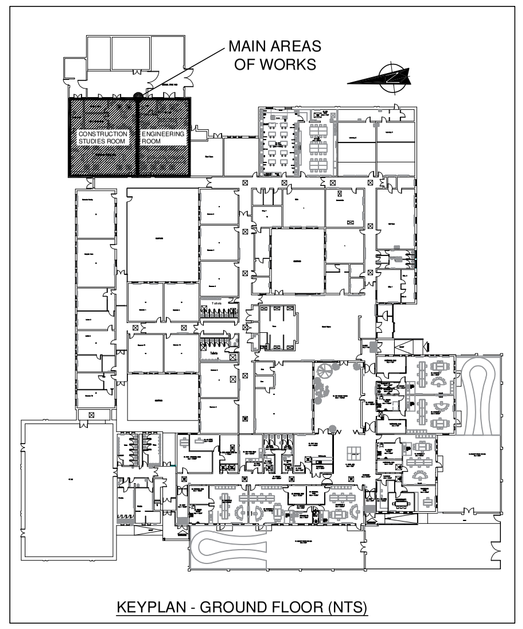

KEYPLAN - GROUND FLOOR (NTS)

PROPOSED LOCATION FOR CENTRAL DUST EXTRACTION UNIT MOUNTED ON CONCRETE PLINTH – FINAL LOCATION OF UNIT TBA.
APPROX. DIMS OF UNIT: 2.6(L) x1.0(W) x 2.5(H)

SPEC OF NEW CENTRAL DUST EXTRACTION UNIT:
- WEATHER PROOF
- 250mm SUCTION CONNECTION DIAMETER
- 3 PHASE MOTOR
- 3500 m^3/hr NOMINAL VOLUME FLOW RATE AT 20 m/s
- 100% RETURN AIR TO ROOM
- MAXIMUM RESIDUAL DUST CONTENT <0.1 mg/m^3
- 490 LITRES COLLECTION CAPACITY
- INTEGRAL CONTROL PANEL TO FACILITATE INTERLOCKING OF WOODWORKING MACHINES
- AUTOMATIC FILTER CLEANING
- VIBRATION CLEANING
- MAXIMUM SOUND PRESSURE LEVEL 73dB(A)
- INTEGRAL AUTOMATIC FIRE SUPPRESSION SYSTEM
- INTEGRAL EXPLOSION PROOF BLOWBACK PROTECTION

600x300 RETURN AIR DUCT CONNECT TO POINT OF CONNECTION ON DUST EXTRACTION UNIT C/W SUITABLE TRANSITION PIECE, RISE AND TURN WITH 90º BEND C/W TURNING VANES

600x300 RETURN AIR DUCT DROP WITH 30º BENDS TO CONNECT TO SPIGOT ON BACK OF GRILLE PLENUM

900(W) x 450(H) x 500(D) GALVANISED STEEL PLENUM ON BACK OF RETURN AIR GRILLE C/W SPIGOT TO SUIT DUCTWORK CONNECTION
CAVITY IN WALL SHALL BE SUITABLY FIRE SEALED ON ALL SIDES OF NEW OPE PRIOR TO INSTALLATION OF DUST EXTRACT RETURN AIR DUCTWORK

ALLOW FOR A LOCAL MOBILE STAND ALONE SANDER EXTRACTION UNIT FOR THE SANDER IN THE CONSTRUCTION STUDIES ROOM. IT SHALL BE A SINGLE PHASE UNIT CAPABLE OF AN AIR VOLUME OF 1350m3/hr AND BE C/W 250 LITRE STORAGE, FILTER KIT & 3m FLEXIBLE HOSE KIT

900x500 RETURN AIR DOUBLE DEFLECTION GRILLE AT HL – MADEL CTM RANGE OR EQUIVALENT

150ø DUST EXTRACT DUCT DROP TO LL ADJACENT TO VERTICAL BANDSAW C/W AUTOMATIC SLIDING DAMPER AND BRANCH AT LL C/W QUICK FIT CONNECTION. SUPPLY & INSTALL ACCESS HATCH AT LL – REFER TO DETAIL

150ø DUST EXTRACT DUCT DROP ADJACENT TO MORTICER WITH AUTOMATIC SLIDING DAMPER, BRANCH TO TOP HOOD WITH MANUAL SLIDE DAMPER & QUICK FIT CONNECTION AND BRANCH AT LL C/W MANUAL SLIDE DAMPER & QUICK FIT CONNECTION – FINAL LOCATION TBA. SUPPLY & INSTALL ACCESS HATCH AT LL – REFER TO DETAIL

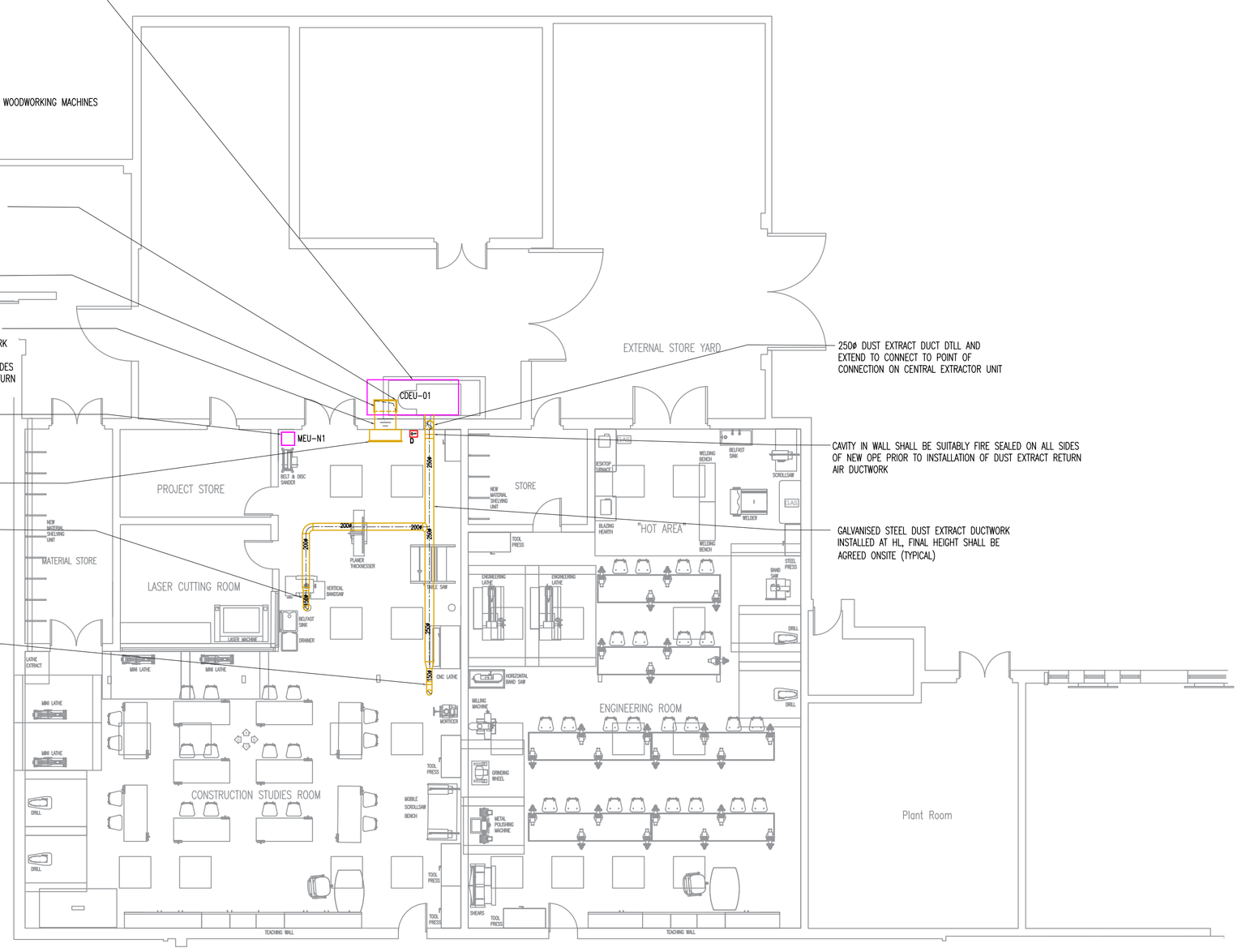

250ø DUST EXTRACT DUCT DTLL AND EXTEND TO CONNECT TO POINT OF CONNECTION ON CENTRAL EXTRACTOR UNIT

CAVITY IN WALL SHALL BE SUITABLY FIRE SEALED ON ALL SIDES OF NEW OPE PRIOR TO INSTALLATION OF DUST EXTRACT RETURN AIR DUCTWORK

GALVANISED STEEL DUST EXTRACT DUCTWORK INSTALLED AT HL, FINAL HEIGHT SHALL BE AGREED ONSITE (TYPICAL)

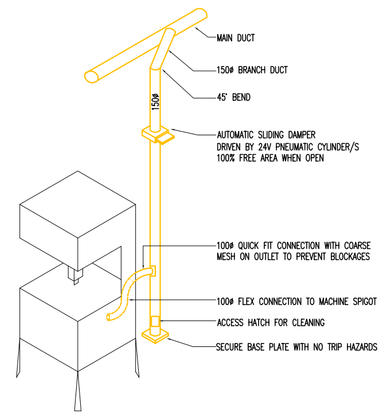

TYPICAL DETAIL AT BAND SAW (NTS)

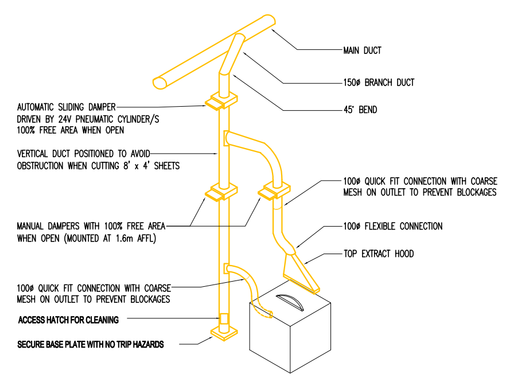

TYPICAL DETAIL AT CIRCULAR SAW (NTS)

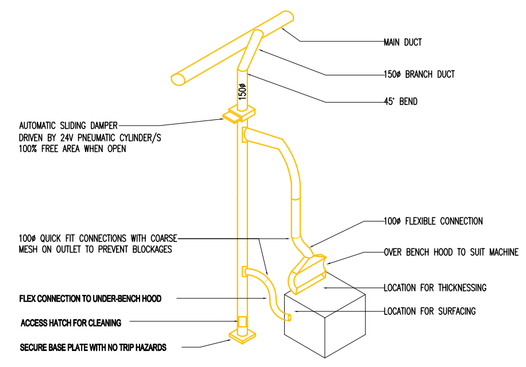

TYPICAL DETAIL AT PLANER (NTS)

GENERAL NOTES

1) Do not scale services equipment from this drawing.
2) All dimensions should be checked on site.
3) Any drawing errors or divergences should be brought to the attention of Geaney Engineering Consultants at the address shown below.
4) Drawing to be read in conjunction with all other drawings and documentation.

NOTES:
1. THIS DRAWING SHALL BE READ IN CONJUNCTION WITH ALL MECHANICAL, ELECTRICAL, ARCHITECTURAL AND STRUCTURAL DRAWINGS & SPECIFICATIONS.
2. THE MECHANICAL CONTRACTOR SHALL CO-ORDINATE ALL SERVICES FULLY WITH ALL TRADES BEFORE COMMENCING WORK.
3. DO NOT SCALE THIS DRAWING. ALL DIMENSIONS SHALL BE TAKEN ON SITE.
4. THE MECHANICAL CONTRACTOR SHALL BE RESPONSIBLE FOR PROVIDING ALL NECESSARY INFORMATION TO ALLOW PROPER CO-ORDINATION OF ALL SERVICES.
5. EXTRA COSTS INCURRED DUE TO THE CO-ORDINATION EXERCISE NOT BEING COMPLETED WILL NOT BE ACCEPTED BY THE ENGINEER.
6. EXACT LOCATION OF ALL SERVICES SHALL BE AGREED WITH THE EMPLOYERS REPRESENTATIVE PRIOR TO COMMENCEMENT ON SITE.
7. ALL SERVICES AS SHOWN ON THIS DRAWING SHALL BE INCLUDED IN THE FINAL TENDER PRICE.
8. SAMPLE OF ALL EQUIPMENT SHALL BE APPROVED BY CLIENT, ARCHITECT AND BUILDING SERVICES ENGINEER PRIOR TO ORDERING.
9. ALL DIMENSIONS IN MILLIMETRES UNLESS STATED OTHERWISE.

DUST EXTRACTION NOTES:
1. THIS DRAWING TO BE READ IN CONJUNCTION WITH DUST EXTRACT SPECIFICATION.
2. DUST EXTRACT DUCTWORK INSTALLATION TO BE INSTALLED IN ACCORDANCE WITH HVCA SPECIFICATION DW/144.
3. FINAL LOCATIONS OF ALL ITEMS IN THE DUST EXTRACTION INSTALLATION TO BE AGREED WITH THE BUILDING SERVICES ENGINEER PRIOR TO COMMENCING INSTALLATION.
4. THE MECHANICAL CONTRACTOR SHALL ALLOW FOR THE SUPPLY & INSTALLATION OF A STAND ALONE SANDER EXTRACTION UNIT AS INDICATED.
5. ALL 90° TURNS IN THE DUST EXTRACT DUCTWORK INSTALLATION SHALL BE MADE WITH LONG RADIUS BENDS OR 2No. 45° BENDS.
6. ALL BRANCH CONNECTIONS TO MAIN DUCTWORK SHALL BE 45° USING LATERAL TEES.
7. AIR VELOCITY IN DUST EXTRACTION SYSTEM DUCTWORK SHALL BE 20m/s.
8. GALVANISED STEEL DUST EXTRACT DUCTWORK SHALL BE INSTALLED AT HL SUPPORTED WITH GALVANISED STEEL SUSPENSION RINGS & FIXINGS SUSPENDED WITH GALVANISED STEEL M10 THREADED DROP RODS FIXED TO GALVANISED STEEL SUPPORTS SECURED TO THE STRUCTURE AT MAXIMUM 1.5m CENTRES – LIAISE WITH STRUCTURAL ENGINEER PRIOR TO COMMENCING WORKS.
9. DUST EXTRACT DUCTWORK SHALL BE RIGIDLY SUPPORTED WITH GALVANISED STEEL SUPPORTS, NOT PRESENT A TRIP HAZARD AND BE FREE OF SHARP EDGES.
10. THE OPERATION OF THE DUST EXTRACT SYSTEM (AND AUTOMATIC SLIDING DAMPERS) SHALL BE INTERLOCKED WITH THE OPERATION OF THE WOODWORKING MACHINES.

LEGEND:

D KEY OPERATED ELECTRICAL ISOLATOR – CENTRAL DUST EXTRACT SYSTEM

Revision	Description	Date	Drawn	Checked
A	Tender Issue	29-Jun-2026	KM	JG

GEANEY ENGINEERING CONSULTANTS
STUDIO 22, WATERFORD BUSINESS PARK, CORK ROAD, WATERFORD, IRELAND.
TEL: 051-879371
FAX: 051-853188
EMAIL: info@geaneyengineering.ie

project title:
Climate Action Summer Works Scheme
Construction Studies & Engineering Room Refurbishment at
Rath Dara Community College,
Blanchardstown, Dublin 15, Co. Dublin

drawing title:
Proposed Dust Extraction Services Layout

scale: 1:100 @A1

architect: Dermot F Geoghegan Architects LTD

project number: 0839

drawing number: Volume A. 3.3 - M103

A1

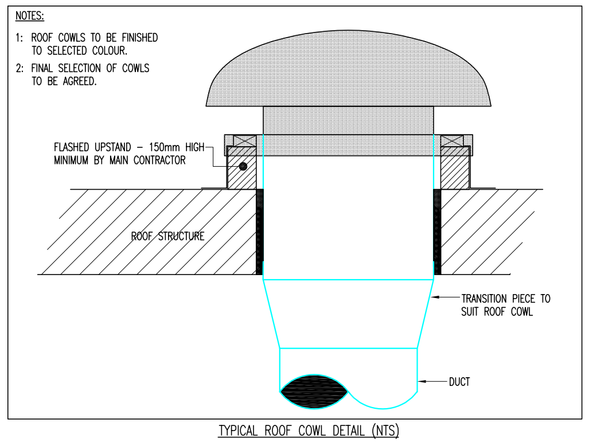

TYPICAL ROOF COWL DETAIL (NTS)

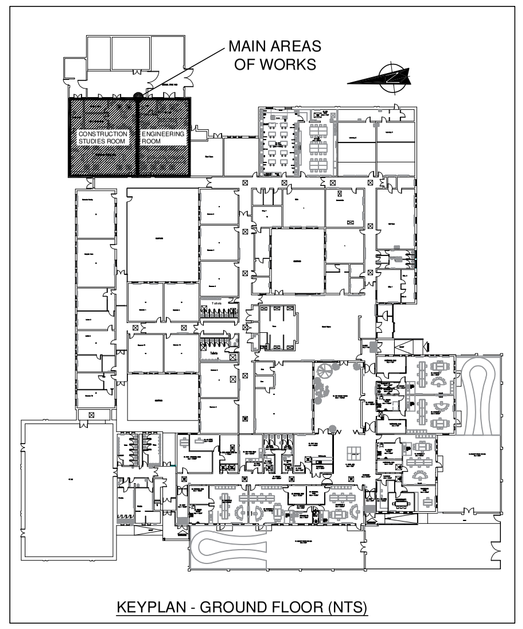

KEYPLAN - GROUND FLOOR (NTS)

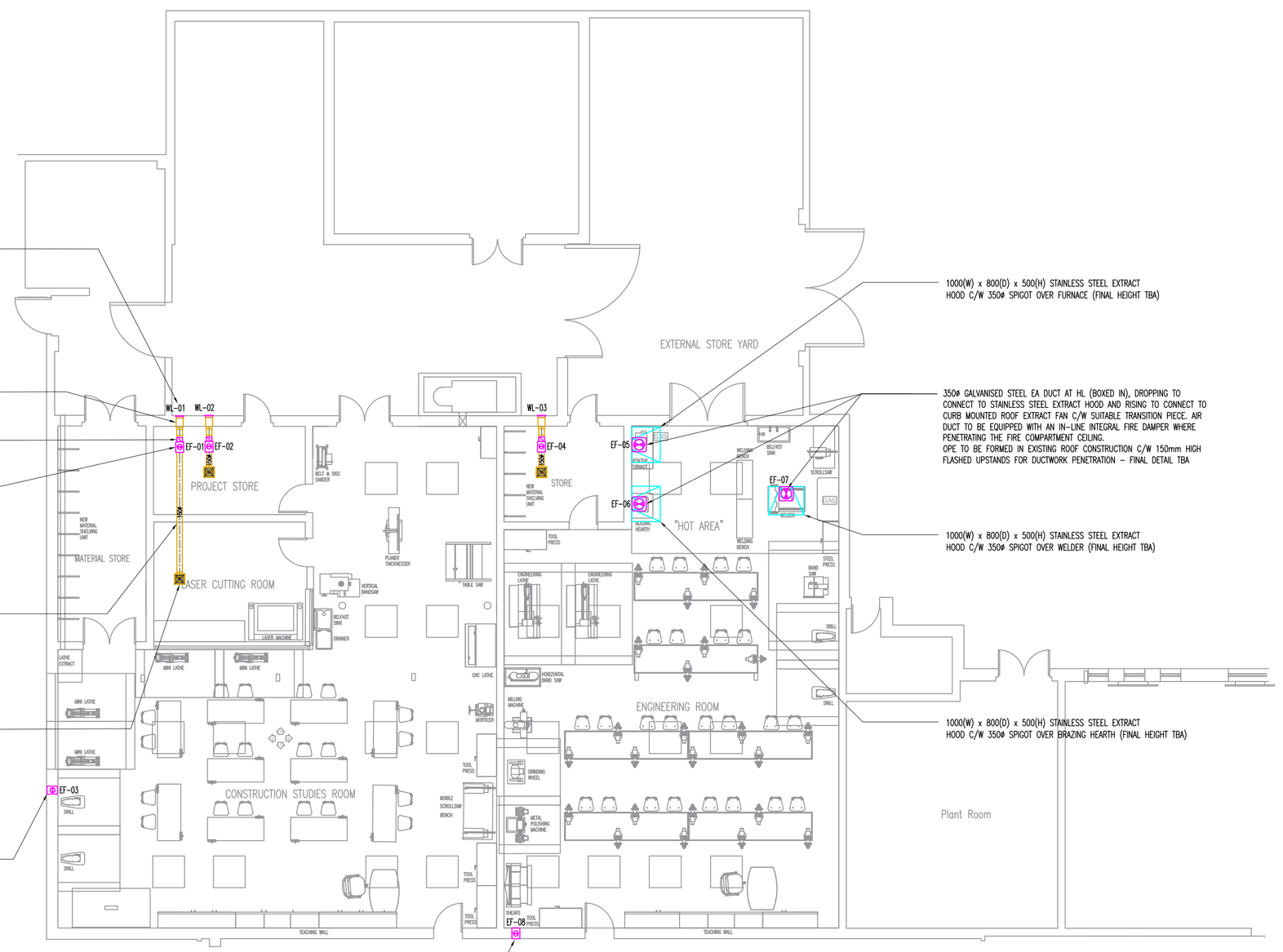

GENERAL NOTES

1) Do not scale services equipment from this drawing.
2) All dimensions should be checked on site.
3) Any drawing errors or divergences should be brought to the attention of Geaney Engineering Consultants at the address shown below.
4) Drawing to be read in conjunction with all other drawings and documentation.

NOTES:

1. THIS DRAWING SHALL BE READ IN CONJUNCTION WITH ALL MECHANICAL, ELECTRICAL, ARCHITECTURAL AND STRUCTURAL DRAWINGS & SPECIFICATIONS.
2. THE MECHANICAL CONTRACTOR SHALL CO-ORDINATE ALL SERVICES FULLY WITH ALL TRADES BEFORE COMMENCING WORK.
3. DO NOT SCALE THIS DRAWING. ALL DIMENSIONS SHALL BE TAKEN ON SITE.
4. THE MECHANICAL CONTRACTOR SHALL BE RESPONSIBLE FOR PROVIDING ALL NECESSARY INFORMATION TO ALLOW PROPER CO-ORDINATION OF ALL SERVICES.
5. EXTRA COSTS INCURRED DUE TO THE CO-ORDINATION EXERCISE NOT BEING COMPLETED WILL NOT BE ACCEPTED BY THE ENGINEER.
6. EXACT LOCATION OF ALL SERVICES SHALL BE AGREED WITH THE EMPLOYERS REPRESENTATIVE PRIOR TO COMMENCEMENT ON SITE.
7. ALL SERVICES AS SHOWN ON THIS DRAWING SHALL BE INCLUDED IN THE FINAL TENDER PRICE.
8. SAMPLE OF ALL EQUIPMENT SHALL BE APPROVED BY CLIENT, ARCHITECT AND BUILDING SERVICES ENGINEER PRIOR TO ORDERING.
9. ALL DIMENSIONS IN MILLIMETRES UNLESS STATED OTHERWISE.

VENTILATION NOTES:

1. DUCTWORK INSTALLATION THROUGHOUT TO BE INSTALLED IN ACCORDANCE WITH HVCA SPECIFICATION DW/144.
2. FIRE DAMPERS SHALL BE INSTALLED IN ACCORDANCE WITH HVCA SPECIFICATION DW/145.
3. FIRE DAMPERS SHALL BE INSTALLED WHEREVER A DUCT PENETRATES A FIRE WALL/COMPARTMENT – IT SHALL BE MOUNTED WITHIN THE BUILDING FABRIC AND SECURELY ATTACHED TO IT.
4. MOTORISED SMOKE/FIRE DAMPERS SHALL BE INSTALLED WHEREVER A DUCT PENETRATES A FIRE WALL/COMPARTMENT OF A DEFINED ESCAPE ROUTE. IT SHALL BE MOUNTED WITHIN THE BUILDING FABRIC AND SECURELY ATTACHED TO IT
5. ALL DUCTING AND ASSOCIATED VENTILATION WORKS TO BE CARRIED OUT BY THE MECHANICAL CONTRACTOR.
6. ALLOW FOR POWER SUPPLY & ELECTRICAL CONNECTION TO ALL MECHANICAL ITEMS.
7. DUCTWORK SHALL BE CONCEALED IN ATTIC SPACES UNLESS INDICATED OTHERWISE.
8. DUCTWORK SUPPORTS SHALL GENERALLY BE GALVANISED STEEL HANGERS & STRAPS SUSPENDED FROM GALVANISED STEEL SUPPORTS SECURED TO ROOF TRUSSES AT MAXIMUM 1.5m CENTRES – LIAISE WITH STRUCTURAL ENGINEER PRIOR TO COMMENCING WORKS.
9. ALL PASSIVE AIR DUCTS TO BE INSULATED WITH MINIMUM 25mm CLASS 'O' INSULATION.
10. THE MECHANICAL CONTRACTOR SHALL ALLOW FOR SUITABLE GALVANISED STEEL TRANSITION PIECES WHERE DUCTS CONNECT TO TERMINALS & FANS.
11. MAINTAIN MINIMUM 1.5m BETWEEN EXHAUST AIR & PASSIVE AIR TERMINALS. FINAL LOCATION OF TERMINALS TO BE AGREED BETWEEN THE MECHANICAL CONTRACTOR AND THE MAIN CONTRACTOR.
12. THE MECHANICAL CONTRACTOR SHALL ALLOW FOR OFFSETS AND TRANSITIONS IN DUCTWORK AS REQUIRED FOR COORDINATION WITH SERVICE OPENINGS, STRUCTURAL ELEMENTS AND OTHER SERVICES.
13. ALL CHANGES OF DIRECTION AND BENDS IN THE DUCTWORK INSTALLATION SHALL PERMIT EASY UNOBSTRUCTED AIR FLOW.
14. THE MECHANICAL CONTRACTOR SHALL ALLOW FOR SUPPLY AND INSTALLATION OF THE STAINLESS STEEL COOKER CANOPIES INDICATED IN THE HOME ECONOMICS ROOM.
15. THE MECHANICAL CONTRACTOR SHALL ALLOW FOR 10No. EASILY ACCESSIBLE ACCESS HATCHES IN THE HOME ECONOMICS ROOM DUCTWORK – FINAL LOCATIONS TBA.
16. SUPPLY & INSTALL NON-RETURN BACKDRAUGHT DAMPERS ON ALL DUCTS WITH A DIAMETER OF 150mm OR LESS. SUPPLY & INSTALL MOTORISED SHUT OFF DAMPERS ON ALL LARGER SIZED DUCTS CONTROLLED BY FAN USE. BACKDRAUGHT DAMPERS SHALL NOT BE PROVIDED ON PASSIVE AIR DUCTS.

VENTILATION LEGEND:

WL-XX	WEATHER LOUVRE – REFER TO SCHEDULE
EF-XX	IN-LINE EXTRACT FAN – REFER TO SCHEDULE
EF-XX	CURB MOUNTED ROOF EXTRACT FAN – REFER TO SCHEDULE
BD	LINE SIZE BACKDRAUGHT SHUTTER – S&P CAR OR EQUIVALENT
EG-B	300x300 4-WAY TYPE EXTRACT AIR GRILLE – MADEL DBQ RANGE OR EQUIVALENT

Revision	Description	Date	Drawn	Checked
A	Tender Issue	29-Jun-2026	KM	JG

GEANEY ENGINEERING CONSULTANTS
STUDIO 22,
WATERFORD BUSINESS PARK,
CORK ROAD,
WATERFORD,
IRELAND.
TEL: 051-879371
FAX: 051-853188
EMAIL: info@geaneyengineering.ie

project title:
Climate Action Summer Works Scheme
Construction Studies & Engineering Room
Refurbishment at
Rath Dara Community College,
Blanchardstown, Dublin 15, Co. Dublin

drawing title:
Proposed Ventilation
Services Layout

scale: 1:100 @A1

architect: Dermot F Geoghegan Architects LTD

project number: 0839

drawing number: Volume A. 3.3 - M104

A1

DE-INSTALLATION NOTES:

THE MECHANICAL CONTRACTOR SHALL ALLOW FOR DISCONNECTING & REMOVING OFF SITE ALL EXISTING OBSOLETE ABOVE GROUND SOILS & WASTES DRAINAGE WITHIN THE MAIN AREAS OF WORKS TOGETHER WITH ALL OBSOLETE FIXINGS & SUPPORTS.

THE MECHANICAL CONTRACTOR SHALL ALLOW FOR ALL NECESSARY MODIFICATIONS TO THE EXISTING ABOVE GROUND SOILS & WASTES DRAINAGE INFRASTRUCTURE AS REQUIRED TO FACILITATE THE PROPOSED WORKS.

THE FULL EXTENT OF THE EXISTING ABOVE GROUND SOILS & WASTES DRAINAGE INSTALLATIONS ARE NOT INDICATED ON THIS DRAWING. ALL EXISTING SOILS & WASTES DRAINAGE INDICATED MUST BE VERIFIED BY THE MECHANICAL CONTRACTOR. IT SHALL BE THE MECHANICAL CONTRACTORS RESPONSIBILITY TO CARRY OUT A SURVEY TO TRACE AND IDENTIFY ALL EXISTING ABOVE GROUND SOILS & WASTES DRAINAGE IMPACTED BY THE PROPOSED WORKS.

EXISTING OBSOLETE DRAINAGE CONNECTIONS TO UPSTANDS SHALL BE BLANKED OFF UNDERGROUND BY MAIN CONTRACTOR. ALL MODIFICATIONS TO UNDERGROUND DRAINAGE BY MAIN CONTRACTOR - TO ARCHITECTS/CIVIL ENGINEERS DETAIL.

EXISTING OBSOLETE DRAINAGE DISCHARGES TO EXTERNAL GULLYS SHALL BE DISCONNECTED & REMOVED AND GULLYS MADE GOOD BY MAIN CONTRACTOR - TO ARCHITECTS/CIVIL ENGINEERS DETAIL.

ALL MODIFICATIONS TO THE EXISTING ABOVE GROUND SOILS & WASTES DRAINAGE INFRASTRUCTURE SHALL BE REVIEWED WITH THE BUILDING SERVICES ENGINEER PRIOR TO COMMENCING WORKS.

EXISTING ABOVE GROUND SOILS & WASTES DRAINAGE INFRASTRUCTURE IN THE AREAS OF WORKS WHICH IS TO BE RETAINED SHALL BE SUITABLY PROTECTED DURING WORKS.

THE CONTRACTOR IS STRONGLY RECOMMENDED TO VISIT SITE PRIOR TO TENDER TO SURVEY THE AREAS OF WORKS AND FAMILIARISE THEMSELVES WITH THE SCOPE OF WORK INVOLVED WITH THE ABOVE AND ALL OTHER WORKS INDICATED ON THIS DRAWING AND THE ACCOMPANYING DRAWINGS TO ENSURE THAT ALL DUE ALLOWANCES AND NECESSARY COSTS ARE ACCOUNTED FOR IN THEIR TENDER SUBMISSION - ADDITIONAL COSTS INCURRED DUE TO THIS EXERCISE NOT BEING CARRIED OUT WILL NOT BE ACCEPTED.

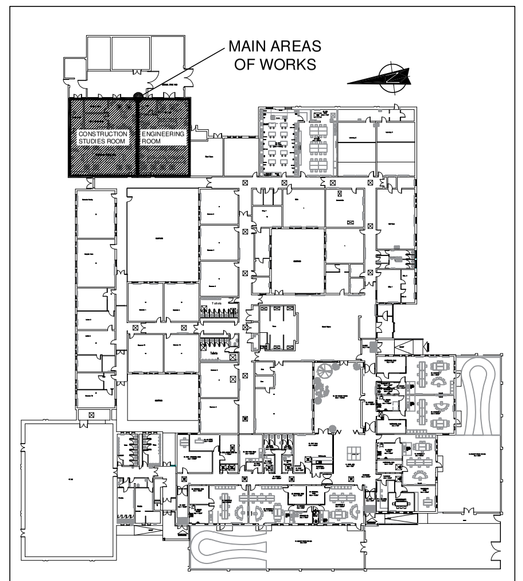

KEYPLAN - GROUND FLOOR (NTS)

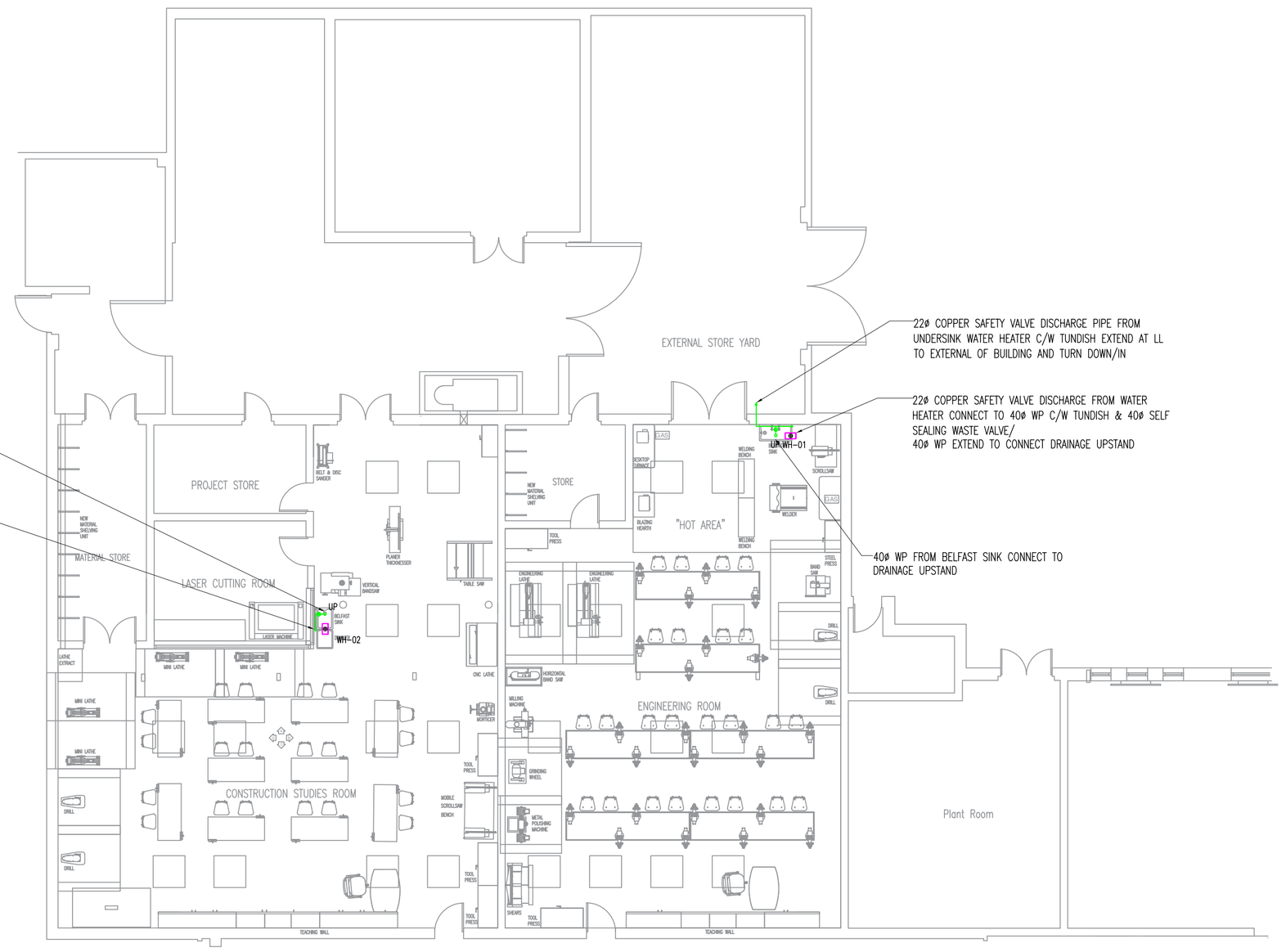

GENERAL NOTES

1) Do not scale services equipment from this drawing.
2) All dimensions should be checked on site.
3) Any drawing errors or divergences should be brought to the attention of Geaney Engineering Consultants at the address shown below.
4) Drawing to be read in conjunction with all other drawings and documentation.

NOTES:

1. THIS DRAWING SHALL BE READ IN CONJUNCTION WITH ALL MECHANICAL, ELECTRICAL, ARCHITECTURAL AND STRUCTURAL DRAWINGS & SPECIFICATIONS.
2. THE MECHANICAL CONTRACTOR SHALL CO-ORDINATE ALL SERVICES FULLY WITH ALL TRADES BEFORE COMMENCING WORK.
3. DO NOT SCALE THIS DRAWING. ALL DIMENSIONS SHALL BE TAKEN ON SITE.
4. THE MECHANICAL CONTRACTOR SHALL BE RESPONSIBLE FOR PROVIDING ALL NECESSARY INFORMATION TO ALLOW PROPER CO-ORDINATION OF ALL SERVICES.
5. EXTRA COSTS INCURRED DUE TO THE CO-ORDINATION EXERCISE NOT BEING COMPLETED WILL NOT BE ACCEPTED BY THE ENGINEER.
6. EXACT LOCATION OF ALL SERVICES SHALL BE AGREED WITH THE EMPLOYERS REPRESENTATIVE PRIOR TO COMMENCEMENT ON SITE.
7. ALL SERVICES AS SHOWN ON THIS DRAWING SHALL BE INCLUDED IN THE FINAL TENDER PRICE.
8. SAMPLE OF ALL EQUIPMENT SHALL BE APPROVED BY CLIENT, ARCHITECT AND BUILDING SERVICES ENGINEER PRIOR TO ORDERING.
9. ALL DIMENSIONS IN MILLIMETRES UNLESS STATED OTHERWISE.

ABOVE GROUND DRAINAGE NOTES:

1. THE SANITARY PIPEWORK INSTALLATION AND TESTING SHALL BE CARRIED OUT IN ACCORDANCE WITH BS EN 12056-2:2000
2. MECHANICAL CONTRACT INCLUDES ALL ABOVE GROUND SOILS AND WASTES, SOIL VENT PIPES, FLOOR GULLIES, TRAPS AND ROOF COWLS. FLUSHING BY THE MAIN CONTRACTOR. BELOW GROUND FOUL SERVICES BY MAIN CONTRACTOR.
3. ALL BENDS AND CHANGES IN DIRECTION TO BE EASY SWEEP TYPE AND COMPLETE WITH RODDING/CLEANING EYE AS REQUIRED.
4. CLEANING EYES FOR WC'S TO BE ABOVE FLOOD LEVEL OF WC PAN.
5. THE MECHANICAL CONTRACTOR SHALL ALLOW FOR INSTALLING THE RISING SOIL VENT PIPES TERMINATING IN COWL 1m ABOVE LEVEL OF ADJACENT WINDOWS AND VENTS. REFER TO CIVIL ENGINEERS DRAWINGS FOR LOCATIONS OF SOIL VENT PIPES FOR UNDERGROUND DRAINAGE.
6. THE MECHANICAL CONTRACTOR SHALL ALLOW FOR SOUND INSULATING ALL SOIL STACKS WITH ROCKWOOL.
7. THE MECHANICAL CONTRACTOR SHALL ALLOW FOR A MINIMUM 200mm OFFSET BETWEEN CONNECTIONS TO STACKS.
8. THE MECHANICAL CONTRACTOR SHALL ALLOW FOR AN ACCESSIBLE CLEANING EYE ON EACH SOIL STACK AT FIRST FLOOR LEVEL.
9. FIRE COLLARS SHALL BE INSTALLED ON SOILS & WASTES PIPEWORK AS THEY PASS THROUGH FIRE COMPARTMENT WALLS AND FLOORS.
10. FINAL LOCATIONS OF BUILDERS DRAINAGE UPSTANDS IN FLOOR SLABS FOR THE SOILS AND WASTES INSTALLATION SHALL BE FINALISED BETWEEN THE MAIN CONTRACTOR AND THE MECHANICAL CONTRACTOR BEFORE INSTALLATION.
11. ALL EXPOSED TRAPS AND DRAINAGE PIPEWORK IN TOILETS AND SHOWER AREAS SHALL BE METAL CHROME PLATED.
12. THE MECHANICAL CONTRACTOR SHALL ALLOW FOR DEEP SEAL TYPE TRAPS (75mm) TO ALL SANITARY WARE.
13. ALL DRAINAGE PIPEWORK IN THE SEN AREA SHALL BE LARGER DIAMETER THAN STANDARD, GENERALLY A SIZE UP AS INDICATED. ALL DRAINAGE PIPEWORK IN THE SEN AREA SHALL BE PROVIDED WITH EASILY ACCESSIBLE CLEANING EYES.

ABOVE GROUND DRAINAGE LEGEND:

SOIL/WASTE PIPE AT LOW LEVEL

UP 110ø UPSTAND FOR SOILS & WASTE DRAINAGE

Revision	Description	Date	Drawn	Checked
A	Tender Issue	29-Jun-2026	KM	JG

GEANEY ENGINEERING CONSULTANTS

STUDIO 22,
WATERFORD BUSINESS PARK,
CORK ROAD,
WATERFORD,
IRELAND.

TEL: 051-879371
FAX: 051-853188
EMAIL: info@geaneyengineering.ie

project title:
Climate Action Summer Works Scheme
Construction Studies & Engineering Room
Refurbishment at
Rath Dara Community College,
Blanchardstown, Dublin 15, Co. Dublin

drawing title:
Proposed Above Ground Soils
& Wastes Drainage Layout

scale: 1:100 @A1

architect: Dermot F Geoghegan Architects LTD

project number: 0839

drawing number: Volume A. 3.3 - M105

A1

DE-INSTALLATION NOTES – GAS:

THE MECHANICAL CONTRACTOR SHALL ALLOW FOR DISCONNECTING & REMOVING OFF SITE ALL EXISTING GAS SERVICES WITHIN THE AREAS OF WORKS TOGETHER WITH ALL OBSOLETE SUPPORTS.

EXISTING GAS SERVICES MAIN INFRASTRUCTURE IS GENERALLY RUN AT HIGH LEVEL IN CORRIDOR. GAS BRANCHES TO FIXTURES ARE GENERALLY RUN AT LOW LEVEL – ALL TO BE TRACED & VERIFIED BY THE MECHANICAL CONTRACTOR.

ALLOW FOR DISCONNECTING & REMOVING ALL EXISTING GAS PIPEWORK SERVING THE FIXTURES IN THE AREAS OF WORKS
– VALVE & BLANK AT CONNECTIONS TO MAIN INFRASTRUCTURE.

NOTE THAT SOME EXISTING GAS BRANCHES SERVING THE FIXTURES TO BE DISCONNECTED & REMOVED MAY BE SHARED WITH FIXTURES IN ROOMS OUTSIDE THE AREAS OF WORKS – MODIFY & EXTEND EXISTING PIPEWORK AS REQUIRED TO MAINTAIN THE INTEGRITY OF THE GAS INSTALLATION OUTSIDE THE MAIN AREAS OF WORKS.

THE FULL EXTENT OF THE EXISTING GAS SERVICES INSTALLATION IS NOT INDICATED ON THIS DRAWING. IT SHALL BE THE MECHANICAL CONTRACTORS RESPONSIBILITY TO CARRY OUT A DETAILED SURVEY TO IDENTIFY ALL EXISTING NAT GAS SERVICES IN THE AREAS OF WORKS – ALL PIPEWORK SHALL BE TRACED BACK TO SOURCE PRIOR TO COMMENCING DE-INSTALLATION WORKS.

ALLOW FOR DE-GASING/PURGING GAS PIPEWORK AS REQUIRED TO FACILITATE WORKS AND FOR RE-GASING/PURGING FOLLOWING COMPLETION OF WORKS.

ALL MODIFICATIONS TO THE EXISTING NAT GAS INFRASTRUCTURE SHALL BE REVIEWED WITH THE BUILDING SERVICES ENGINEER PRIOR TO COMMENCING WORKS.

THE SCHOOL AUTHORITY SHALL BE MADE AWARE THAT NAT GAS SERVICES WILL BE OUT-OF-USE AT TIMES IN AREAS OF THE BUILDING/S OUTSIDE THE MAIN AREAS OF WORKS – THE MECHANICAL CONTRACTOR SHALL ALLOW FOR OUT-OF-HOURS WORKS TO AVOID IMPACTING SERVICES DURING SCHOOL/OFFICE HOURS.

THE MECHANICAL CONTRACTOR SHOULD VISIT SITE PRIOR TO TENDER TO SURVEY THE AREAS OF WORKS AND FAMILIARISE THEMSELVES WITH THE SCOPE OF WORK INVOLVED WITH THE ABOVE AND ALL OTHER WORKS INDICATED ON THIS DRAWING AND THE ACCOMPANYING DRAWINGS TO ENSURE THAT ALL DUE ALLOWANCES AND NECESSARY COSTS ARE ACCOUNTED FOR IN THEIR TENDER SUBMISSION – ADDITIONAL COSTS INCURRED DUE TO THIS EXERCISE NOT BEING CARRIED OUT WILL NOT BE ACCEPTED.

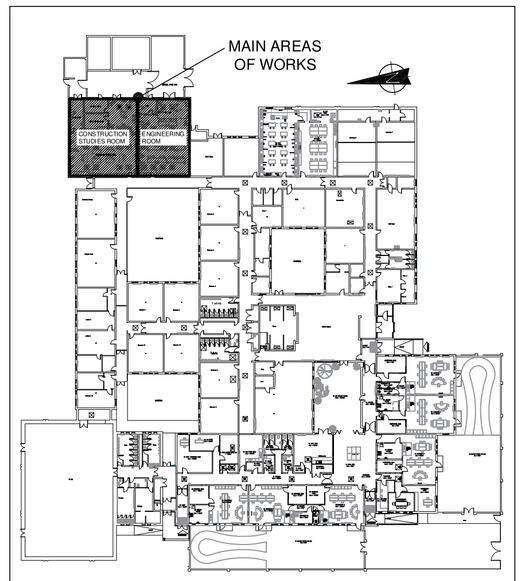

KEYPLAN - GROUND FLOOR (NTS)

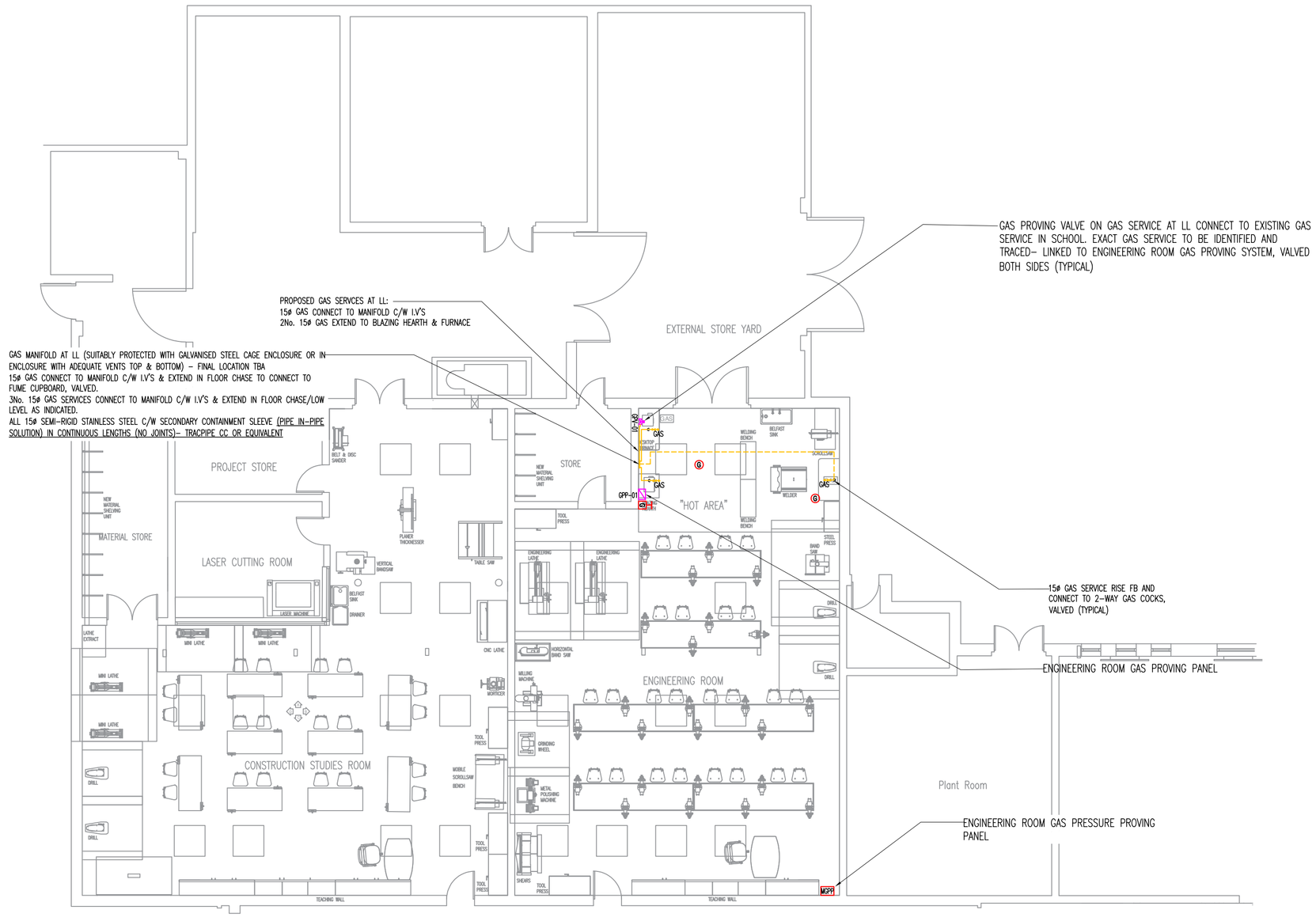

GENERAL NOTES

1) Do not scale services equipment from this drawing.
2) All dimensions should be checked on site.
3) Any drawing errors or divergences should be brought to the attention of Geaney Engineering Consultants at the address shown below.
4) Drawing to be read in conjunction with all other drawings and documentation.

NOTES:

1. THIS DRAWING SHALL BE READ IN CONJUNCTION WITH ALL MECHANICAL, ELECTRICAL, ARCHITECTURAL AND STRUCTURAL DRAWINGS & SPECIFICATIONS.
2. THE MECHANICAL CONTRACTOR SHALL CO-ORDINATE ALL SERVICES FULLY WITH ALL TRADES BEFORE COMMENCING WORK.
3. DO NOT SCALE THIS DRAWING. ALL DIMENSIONS SHALL BE TAKEN ON SITE.
4. THE MECHANICAL CONTRACTOR SHALL BE RESPONSIBLE FOR PROVIDING ALL NECESSARY INFORMATION TO ALLOW PROPER CO-ORDINATION OF ALL SERVICES.
5. EXTRA COSTS INCURRED DUE TO THE CO-ORDINATION EXERCISE NOT BEING COMPLETED WILL NOT BE ACCEPTED BY THE ENGINEER.
6. EXACT LOCATION OF ALL SERVICES SHALL BE AGREED WITH THE EMPLOYERS REPRESENTATIVE PRIOR TO COMMENCEMENT ON SITE.
7. ALL SERVICES AS SHOWN ON THIS DRAWING SHALL BE INCLUDED IN THE FINAL TENDER PRICE
8. SAMPLE OF ALL EQUIPMENT SHALL BE APPROVED BY CLIENT, ARCHITECT AND BUILDING SERVICES ENGINEER PRIOR TO ORDERING.
9. ALL DIMENSIONS IN MILLIMETRES UNLESS STATED OTHERWISE.

GAS SERVICES NOTES:

1. ALL PIPEWORK, EQUIPMENT, VALVES, INSTRUMENTATION ETC. SHOWN ON THIS DRAWING ARE PART OF THE NEW INSTALLATION UNLESS INDICATED OTHERWISE.
2. GAS INSTALLATION TO BE INSTALLED IN ACCORDANCE WITH IS820:2010.
3. THE MECHANICAL CONTRACTOR SHALL ALLOW FOR FINAL CONNECTION TO ALL APPLIANCES.
4. ALL ABOVE GROUND GAS PIPEWORK SHALL BE MILD STEEL & FINISHED IN TWO COATS OF YELLOW PAINT (OCHRE) AND MARKED IN EACH ROOM AND AT 2.0m INTERVALS AS GAS DISTRIBUTION PIPE UNLESS INDICATED OTHERWISE.
5. WHERE GAS PIPES RUN IN VOIDS, THE PIPE SECTION SHOULD BE CONTINUOUS THROUGHOUT ITS ENTIRE LENGTH WITHIN THE VOID OR WELDED THROUGHOUT (NO JOINTS).
6. GAS PIPEWORK SHALL BE MOUNTED IN M10/M12 PIPEWORK CLIPS SUITABLE FOR STEEL PIPES (FLAMCO OR EQUIVALENT) AT MAXIMUM 1.2m CENTRES WITH GALVANISED STEEL THREADED RODS SECURED TO THE STRUCTURE.
7. THE MECHANICAL CONTRACTOR SHALL ALLOW FOR OFFSETS IN PIPEWORK AS REQUIRED FOR COORDINATION WITH SERVICE OPENINGS, STRUCTURAL ELEMENTS AND OTHER SERVICES.
8. MECHANICAL AND ELECTRICAL CONTRACTORS SHALL LIAISE AND ARRANGE FOR INTERFACE BETWEEN GAS SAFETY INSTALLATION AND ELECTRICAL INSTALLATION.
9. ALLOW FOR DE-GASSING/PURGING THE EXISTING GAS INSTALLATION AND FOR RE-GASSING/PURGING ONCE WORKS ARE COMPLETE.
10. ALL CONNECTIONS AND MODIFICATIONS TO EXISTING GAS SERVICES INFRASTRUCTURE TO BE CARRIED OUT AT SCHEDULED TIMES TO BE AGREED – ALLOW FOR OUT OF HOURS WORK.
11. FINAL LOCATION OF ALL CONNECTIONS TO EXISTING SYSTEMS TO BE AGREED ON SITE PRIOR TO COMMENCEMENT OF WORK. MODIFICATIONS TO EXISTING SYSTEMS TO BE AGREED WITH THE BUILDING SERVICES ENGINEER PRIOR TO COMMENCING WORKS.

GAS SAFETY NOTES:

1. ALL GAS SAFETY SERVICES INDICATED & NOTED ON THIS DRAWING ARE PART OF THE NEW INSTALLATION UNLESS CLEARLY INDICATED OTHERWISE.
2. THE ELECTRICAL CONTRACTOR SHALL ALLOW FOR ALL WIRING FOR THE GAS SAFETY SYSTEMS.
3. ALL ELECTRICAL WIRING TO GAS PANELS AND ASSOCIATED GAS EQUIPMENT SHALL BE AS RECOMMENDED BY THE MANUFACTURER'S SPECIFICATIONS – TO BE WIRED IN A SEPARATE DEDICATED CONDUIT SYSTEM.
4. MECHANICAL AND ELECTRICAL CONTRACTORS SHALL LIAISE AND ARRANGE FOR INTERFACE BETWEEN GAS SAFETY INSTALLATIONS AND ELECTRICAL INSTALLATIONS.

LEGEND:

GPV- GAS PROVING VALVE C/W PRESSURE SENDER UNIT

GPP- GAS PROVING PANEL (KEY OPERATED) C/W INTEGRAL EMERGENCY GAS KNOCK OUT POINT – MEDEM GPPS-evo v4 OR EQUIVALENT

G GAS DETECTOR (C3H8)

C CARBON MONOXIDE DETECTOR

G GAS EMERGENCY KNOCK OUT POINT

GAS GAS CONNECTION TO GAS COCK

GAS SERVICE AT LOW LEVEL

GAS SERVICE UNDERFLOOR

Revision	Description	Date	Drawn	Checked
A	Tender Issue	29-Jun-2026	KM	JG

GEANEY ENGINEERING CONSULTANTS

STUDIO 22,
WATERFORD BUSINESS PARK,
CORK ROAD,
WATERFORD,
IRELAND.

TEL: 051-879371
FAX: 051-853188
EMAIL: info@geaneyengineering.ie

project title:
Climate Action Summer Works Scheme
Construction Studies & Engineering Room
Refurbishment at
Rath Dara Community College,
Blanchardstown, Dublin 15, Co. Dublin

drawing title:
Proposed Gas Services Layout

scale: 1:100 @A1

architect: Dermot F Geoghegan Architects LTD

project number: 0839

drawing number: Volume A. 3.3 - M106